DFI 76950
Fully Integrated dishwasher with IonClean, MultiFlex-3 cutlery tray and Automatic Opening system

REFERENCE

REF: 114260004 EAN: 8434778013481

FEATURES

Fully integrated dishwasher
Electronic control panel with white LED display
MultiFlex-3 cutlery tray
IonClean antibacterial function
Place Settings : 15
Washing programs : 9
Washing temperatures : 35°, 40°, 45°,50°, 65°, 70° C
AquaStop safety system
SmartSensor, mesures the level of dirtiness
MultiCleaner Sensor
PremiumDry - Automatic Opening system
Beam on floor
PushUp system with 3 positions
FlexiSet4 lower basket
Fast programs: 1Hour and Mini 30
Special programas:AutoClean, GlassCare and DualCare
Special functions: Half load, Express,Power Wash
Column installation
SlidingDoor installation system
Delay timer 1-24h
Low salt and rinse indicator
Energy efficency class : A+++
Noise level: 42 dBA

Beam On Floor
ECO function
IonClean
MultiCleaner sensor, compatible with both capsules and detergent powder
PremiumDry automatic opening system
SlidindDoor installation
AquaLogic
MultiFlex-3, wtih flexible cutlery tray

DIMENSIONS

Product height (mm): 818
Product width (mm): 598
Product depth (mm): 550
Product length (mm):
Net weight (Kg): 40,1

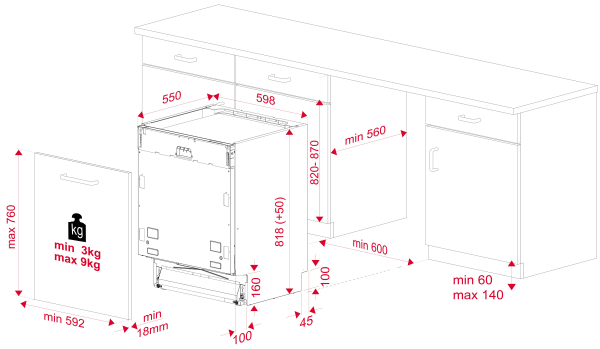

TECHNICAL DETAILS

Energy Efficiency Class: D
Energy Consumption (Kw/day): -
Water consumption (litres/year): 2660
Noise Level (dBA): 42
Power rate (V): 220-240
Frequency (Hz): 50

COLOURS