MWE 259 FI

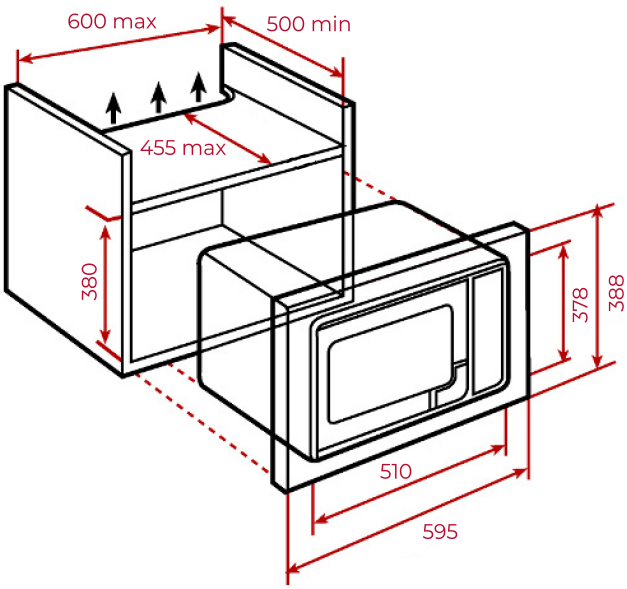

REFERENCE

REF: 112000000 EAN: 8434778017328

DIMENSIONS

Product height (mm): 378
Product width (mm): 515
Product depth (mm): 413
Product length (mm):
Net weight (Kg): 17,7

TECHNICAL DETAILS

MWO Power (W): -
Frequency (Hz): -
Maximum Nominal Power (W): -
Grill (W): -

COLOURS

112000000 Black