HLB 860

Multifunction SurroundTemp A+ oven with cooking assistant



HydroClean

SurroundTemp, extra rear resistance for a uniform cooking

70L capacity

Plus extension telescopic guide

SoftClose

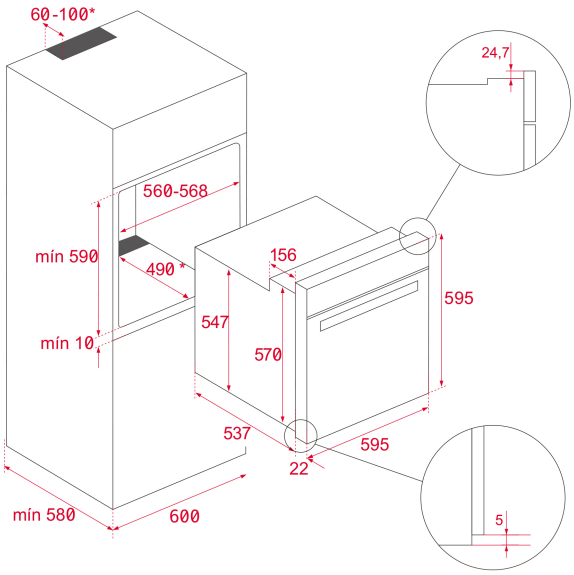

REFERENCE

REF: 41560091 **EAN:** 8421152154755

FEATURES

Multifunction SurroundTemp - 12 Cooking functions
Teka HydroClean®PRO cleaning system
A+ Energy class: up to 20% less consumption
Capacity, gross/net: 71/70 litres
True colour TFT 4 display with digital timer
Personal cooking assistant (20 recipes)
SlowCook function: low temperature cooking
Automatic temperature and time suggestion for each function
Quick heating
Children safety block
Automatic disconnection security system
Triple glazed door
SoftClose system
1 Plus-Extension telescopic guide, 5 cooking levels
Deep & standard enamelled trays and reinforced grid
Tangential ventilation

DIMENSIONS

Product height (mm): 595
Product width (mm): 595
Product depth (mm): 537+22
Product length (mm):
Net weight (Kg): 32

TECHNICAL DETAILS

Energy Efficiency Class: A+
Power rate (V): 220-240
Frequency (Hz): 50/60
Maximum Nominal Power (W): 3215

COLOURS

41560091 Black Glass with StainlessSteel frame