ForSquare 72.40 TG AUTO Inset Tegranite Sink with one bowl

Main bowl depth: 200mm

High quality colour intensity

Easy to clean

Food safe

Scratch Proof

DESCRIPTION	Inset Tegranite Sink with one bowl
LIFE STYLE	Maestro
COLOURS	
REFERENCE	REF. 115230001 EAN. 8434778007046

ForSquare 72.40 TG AUTO

FEATURES	Tegranite+ sink One bowl Inset installation 3½" automatic basket waste with siphon 200 mm deep bowl 80 cm base unit

ForSquare 72.40 TG AUTO

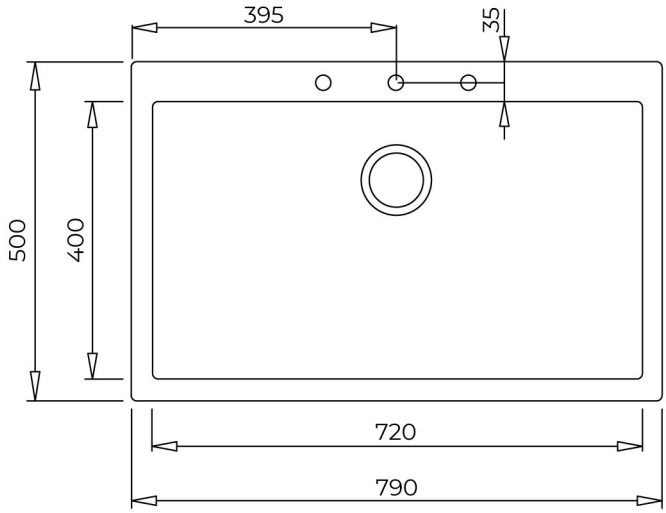

DIMENSIONS

Product height (mm):
Product width (mm): 500
Product depth (mm): 200
Product length (mm): 790
Net weight (Kg): 13

TECHNICAL DETAILS

MAIN BOWL	**Main Bowl Length (mm):** 720 **Main Bowl Width (mm):** 400 **Main Bowl Depth (mm):** 200
OTHER FEATURES	**Material:** Tegranite+ **Type of installation:** Inset **Number of tap holes:** Pre-Drilled **Valve hole type:** 3½" **Overflow hole:** Round **Sink Bowl / Top thickness (mm):** 8,0
OTHERS	**Base unit (cm):** 80
SINK LAY OUT	**Number of bowls:** 1 **Number of drainers:** 0
ACCESSORIES	**Installation clips:** Yes **Siphon:** Yes