MLC 844 Built-in Microwave + Grill with 3 Cooking functions in 45cm

44L capacity | Defrost by time | Defrost by weight

DESCRIPTION	Built-in Microwave + Grill with 3 Cooking functions in 45cm
LIFE STYLE	Maestro
COLOURS	
REFERENCE	REF. 40584400 EAN. 8421152151563

MLC 844

FEATURES

Microwave + Grill
3 Cooking functions
Capacity, gross/net: 45/44 litres
1400 W grill
0-90 min. Timer
Quick start 30"
chromed guides
5 Cooking heights
1 reinforced grids
Touch Control panel with LED display
5 power levels, 1000 W
Automatic disconnection security system
Tangential ventilation
Defrost by time and weight
Double Glazed door

MLC 844

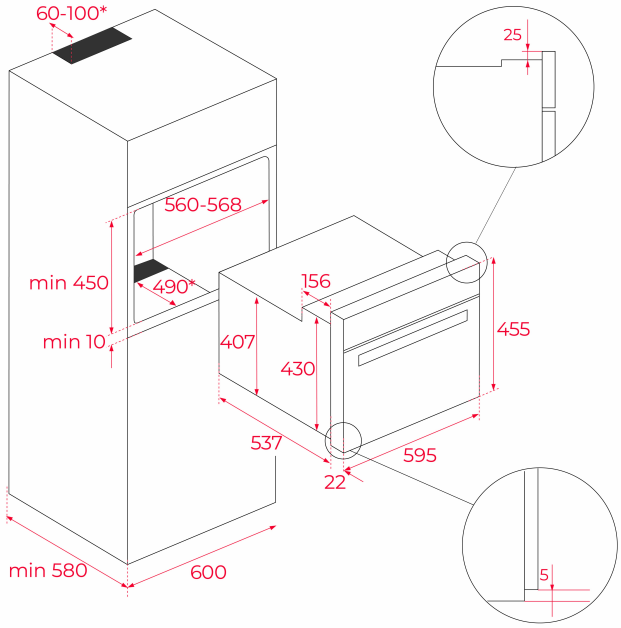

DIMENSIONS

Product height (mm): 455
Product width (mm): 595
Product depth (mm): 559
Product length (mm):
Net weight (Kg): 28,4

TECHNICAL DETAILS

FEATURES

Certificates: CE/CB
Number of cavities: 1
Type of inner light: Halogen
Inside light position: Top rear right
Enamelled cavity: Yes
Min. Temperature Regulator (ºC): 50
Max. Temperature Regulator (ºC): 250
Function selector: Mechanical
Number of cooking functions: 3
Grill function: Yes
Touch Control Programmer: Yes
Minute Minder: Yes
Knobs type: MMX FIX KNOB
Removable chromed tray guides: Yes
Number of guide levels: 5
Number of guide levels (lower cavity): 0
Forced refrigeration tangential 1 speed: Yes
Microwave function: Yes
Microwave + Grill function: Yes
Microwave defrosting: Yes
Number of power levels: 5
Tangential ventilation: Yes

ELECTRIC CONNECTION	**Maximum Nominal Power (W):** 3200 **Frequency (Hz):** 50 **Power rate (V):** 220-240 **Cable Connection Length (cm):** 110 **Inside light Consumption (W):** 25
ENERGY CONSUMPTION	**Grill (W):** 1400 **Cooling Fan Motor (W):** 18
SAFETY SYSTEMS	**Automatic disconnection when opening the door:** Yes **Grill protection:** Yes **Safety Thermostat:** Yes
CLEANING SYSTEM	**Fingerprint proof stainless steel:** Yes **Crystal Clean Enamel (Slippery):** Yes
ACCESSORIES	**Glass Tray:** 1 **Reinforced grid:** 1