STONE 90 B-TG 2B AUTO Inset Tegranite Sink with two bowls

Main bowl depth: 200mm

High quality colour intensity

Easy to clean

Food safe

Scratch Proof

DESCRIPTION	Inset Tegranite Sink with two bowls
LIFE STYLE	Maestro
COLOURS	
REFERENCE	REF. 115260010 EAN. 8434778005257

STONE 90 B-TG 2B AUTO

FEATURES

Tegranite+ sink
Two bowls
Inset installation
3½" automatic basket waste with siphon
200 mm deep bowls
90 cm base unit

STONE 90 B-TG 2B AUTO

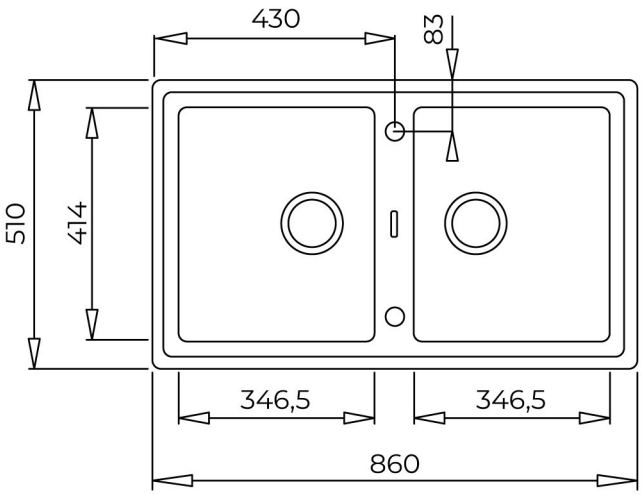

DIMENSIONS

Product height (mm):
Product width (mm): 510
Product depth (mm): 200
Product length (mm): 860
Net weight (Kg): 15,5

TECHNICAL DETAILS

MAIN BOWL

Main Bowl Length (mm): 347
Main Bowl Width (mm): 414
Main Bowl Depth (mm): 200

OTHER FEATURES

Material: Tegranite+
Type of installation: Inset
Number of tap holes: Pre-Drilled
Valve hole type: 3½"
Overflow hole: Round
Sink Bowl / Top thickness (mm): 10/7

OTHERS

Base unit (cm): 90

SECONDARY BOWL

Secondary Bowl Length (mm): 347
Secondary Bowl Width (mm): 414
Secondary Bowl Depth (mm): 200

SINK LAY OUT	**Number of bowls:** 2 **Number of drainers:** 0 **Drainer position:** Reversible
ACCESSORIES	**Installation clips:** Yes **Siphon:** Yes