CALVIA CALVIA CONCEALED BATH/SHOWER MIXER

DESCRIPTION	CALVIA CONCEALED BATH/SHOWER MIXER
COLOURS	
REFERENCE	REF. 322410200 EAN. 8413509207610

CALVIA

FEATURES	1 ways concealed mixer Without shower set Concealed part included 40 mm cartridge

TEKA

CALVIA

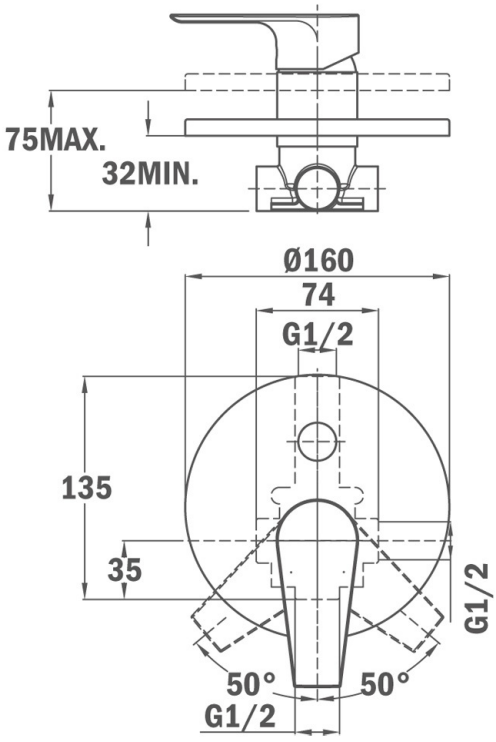

DIMENSIONS

Product height (mm):
Product width (mm):
Product depth (mm):
Product length (mm):
Net weight (Kg):

TECHNICAL DETAILS

MODELS	**Type of installation:** Wall-mounted