IN 995 Mixer

Anti-scale aerator

Swivel spout

DESCRIPTION	Mixer
LIFE STYLE	Total
COLOURS	
REFERENCE	REF. 53991512 EAN. 8413509202783

IN 995

FEATURES	Mixer Swivel spout 3/8" flexible inlet pipes Anti-scale aerator

IN 995

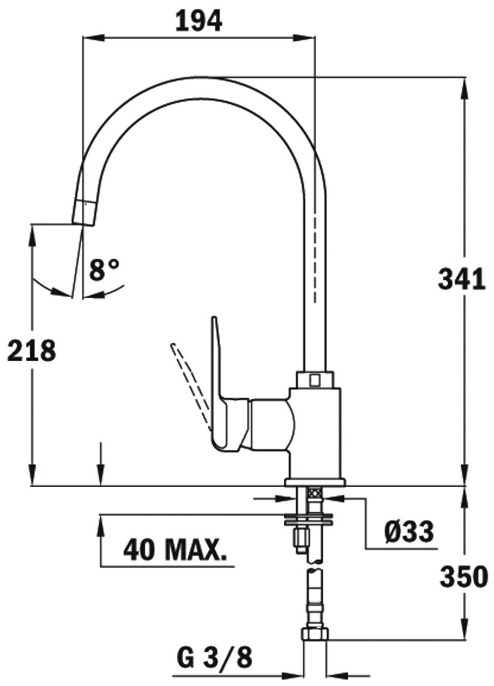

DIMENSIONS

Product height (mm):
Product width (mm):
Product depth (mm):
Product length (mm):
Net weight (Kg): 1,55