MAESTRO **HLF-840**

Multifunction Oven with 9 cooking functions

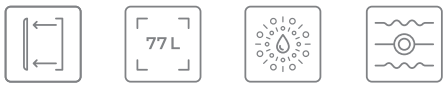

Plus Extension Telescopic Guide | 77L | HydroClean | SurroundTemp

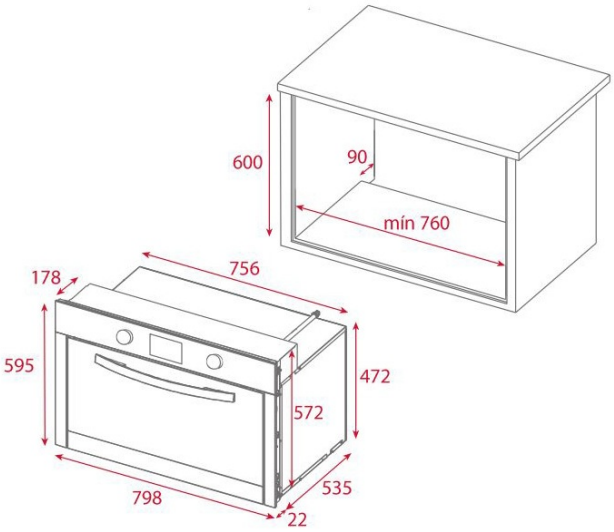

REFERENCE

REF: 41592305 EAN: 8421152155066

FEATURES

Multifunction SurroundTemp oven
9 cooking functions
Touch control display with knob
Electronic timer
Chrome supports with 5 cooking levels
Easy slide telescopic guides
Removable triple glazed door
Children safety lock
Automatic disconnection safety system
Manual quick preheating
Anti-tip deep tray and reinforced grid
Capacity (gross/net): 91 / 77 litres

DIMENSIONS

Product height (mm): 580
Product width (mm): 760
Product depth (mm): 560
Product length (mm):
Net weight (Kg): 49

TECHNICAL DETAILS

Energy Efficiency Class: A
Power rate (V): 220-240
Frequency (Hz): 50/60
Maximum Nominal Power (W): 3551

COLOURS

41592305 Black Glass with StainlessSteel frame