EASY **HBC 535**

Conventional compact oven with HydrocleanECO in 45 cm

48L HydroClean

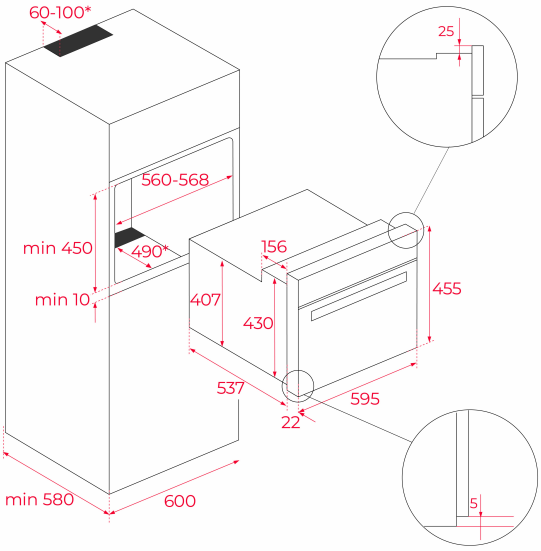

REFERENCE

REF: 41531010 EAN: 8421152148440

FEATURES

Conventional oven
3 cooking functions
HydroClean system
Mechanical control knobs
Mechanical timer (Stop function)
Chrome supports with 4 cooking levels
Removable triple glazed door
Anti-tip deep tray
Capacity (gross/net): 49 / 48 litres

DIMENSIONS

Product height (mm): 455
Product width (mm): 595
Product depth (mm): 537+22
Product length (mm):
Net weight (Kg): 23

TECHNICAL DETAILS

Energy Efficiency Class: A
Power rate (V): 220-240
Frequency (Hz): 50/60
Maximum Nominal Power (W): 2593

COLOURS

41531010 Stainless Steel