TOTAL **HSC 635 P**

Pyrolytic Multifunction Compact Oven in 45 cm with 8 cooking modes

44L | DualClean | Plus Extension Telescopic Guide | HydroClean | Pyrolysis

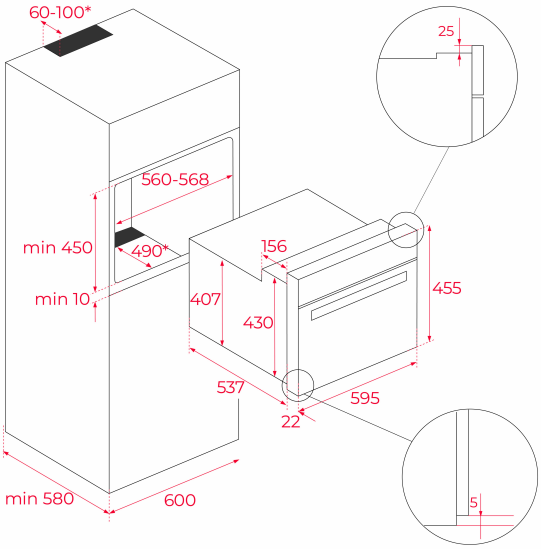

REFERENCE

REF: 41534030 EAN: 8421152148693

FEATURES

Multifunction oven
8 cooking functions
Pyrolysis self-cleaning system and automatic HydroClean system
Touch control display with knobs
Electronic timer (Delay/Start function)
Chrome supports with 3 cooking levels
Plus Extension Telescopic guides
Removable triple glazed door
Children safety lock
Automatic disconnection security system
Safety door lock
Manual quick preheating
Anti-tip deep tray
Capacity (gross/net): 45 / 44 litres

DIMENSIONS

Product height (mm): 455
Product width (mm): 595
Product depth (mm): 537+22
Product length (mm):
Net weight (Kg): 28

TECHNICAL DETAILS

Energy Efficiency Class: A+
Power rate (V): 220-240
Frequency (Hz): 50/60
Maximum Nominal Power (W): 2515

COLOURS

41534030 Stainless Steel