HLB 8400 ST

Urban Colors Edition. Multifunction oven with 9 cooking functions and HydroClean system

70L

Plus extension guides: 75% extraction

HydroClean steam cleaning system

SurroundTemp

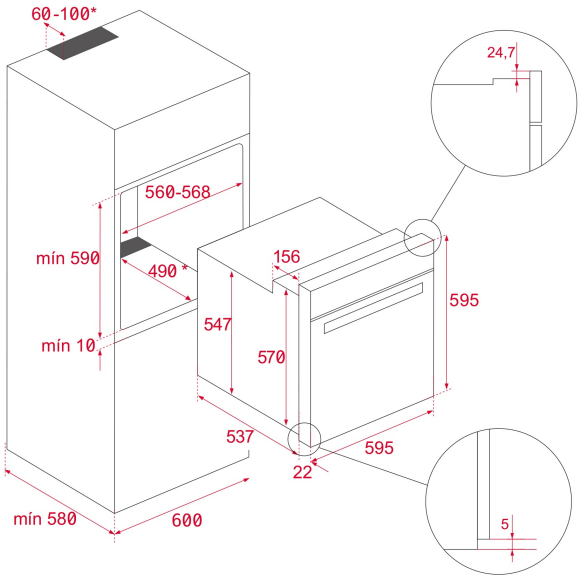

REFERENCE

REF: 111000006 EAN: 8434778007589

FEATURES

Urban Colors Edition
Multifunction SurroundTemp oven
8 cooking functions
Automatic HydroClean system
Touch control display with knobs
Electronic timer (Delay/Start function)
Chrome supports with 5 cooking levels
Plus-extension telescopic guides
Removable quadruple glazed door
Automatic disconnection safety system
Children safety lock
Manual quick preheating
Anti-tip deep tray
Capacity (gross/net): 71 / 70 litres

DIMENSIONS

Product height (mm): 595
Product width (mm): 595
Product depth (mm): 537+22
Product length (mm):
Net weight (Kg): 28

TECHNICAL DETAILS

Energy Efficiency Class: A+
Power rate (V): 220/240
Frequency (Hz): 50/60
Maximum Nominal Power (W): 3215

COLOURS

111000006	Stone grey glass
111000005	White glass
111000005	Black glass