IBC 63010 M
Urban Colors Edition. Induction hob with MultiSlider touch control and 3 cooking zones

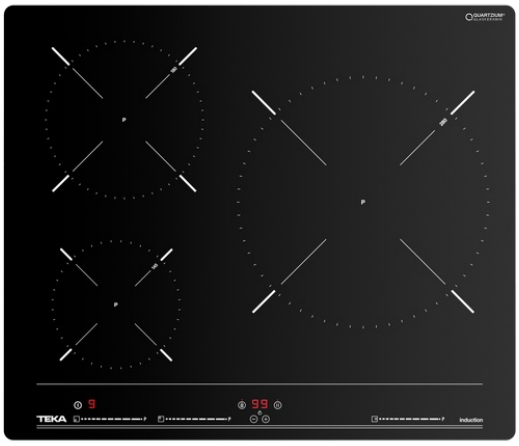

MultiSlider Autolock Power Power Plus Easy installation

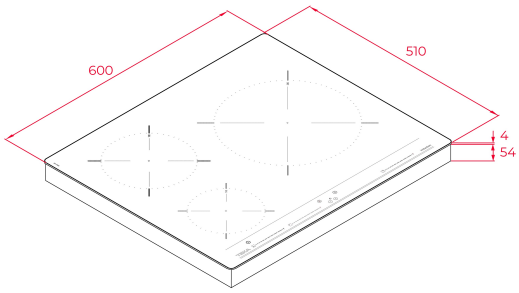

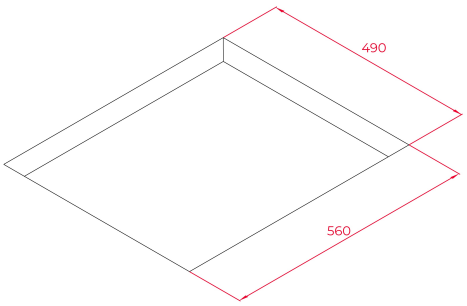

REFERENCE

REF: 112520006 EAN: 8434778003802

FEATURES

Urban Colors Edition
Induction hob
Touch Control MultiSlider
3 cooking zones
1 zone Ø 280 mm
1 zone Ø 180 mm
1 zone Ø 145 mm
Ceramic glass surface
Auto-lock safety system
Cooking timer
Power plus
Child lock
Residual heat indicator
Power management
Easy installation kit
Maximum nominal power 5900 W
Optional: Grilling plate
Optional: Teppanyaki

DIMENSIONS

Product height (mm): 50
Product width (mm): 600
Product depth (mm): 510
Product length (mm):
Net weight (Kg): 9,63

TECHNICAL DETAILS

Power rate (V): 220-240
Frequency (Hz): 50/60
Maximum Nominal Power (W): -

COLOURS

112520006 Black glass

ENERGY EFFICIENCY

Power consumption in standby mode (W): 0.3
Time to reach standby mode (min): 1