MAESTRO **FIH 16760 TOS BK**

VarioPro Series Modular hood in 51 cm with Touch Control

Stop Delay Timer

Fresh AIR

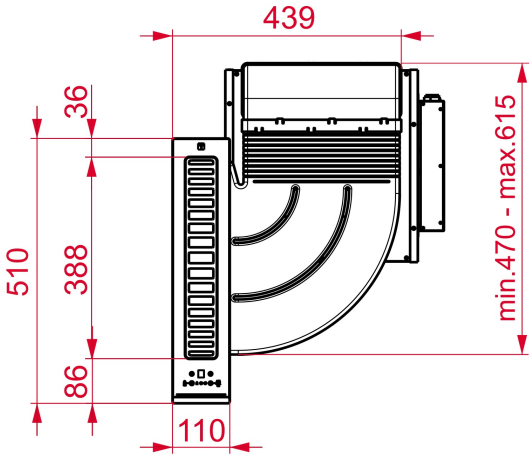

REFERENCE

REF: 113160000 EAN: 8434778012675

FEATURES

Urban Colors Edition
VarioPro Modular hood
Touch control
FreshAir function
Brushless EcoPower Motor
3 speeds + 1 intensive
Free Outlet exhaust capacity (m3/h): 630
Intensive speed exhaust capacity (m3/h): 600
Max speed exhaust capacity (m3/h): 540
Min speed exhaust capacity (m3/h): 415
Intensive speed sound level (dBA): 70
Max speed sound level (dBA): 67
Min speed sound level (dBA): 62
1 mesh washable filter
Stop delay timer
Filter saturation indicator
Operating pilot light
Optional recirculation kit with tube cover installation: RFH 36100 F0A
Optional Regenerative filter : R1RFB

DIMENSIONS

Product height (mm): 186
Product width (mm): 110
Product depth (mm): 510
Product length (mm):
Net weight (Kg): 15

TECHNICAL DETAILS

Energy Efficiency Class: A+
Noise (LwA) Min Speed (dB): 62
Noise (LwA) Max Speed (dB): 67
Noise (LwA) Boost Speed (dB): 70
Ø Outlet (mm): 220x90

COLOURS

113160000 Black