TOTAL **DFI 46700**

Fully integrated dishwasher with 14 place settings and 7 washing programs

Eco Function

Extra Dry function

Detergent detector system

Water dirtiness sensor Aqualogic

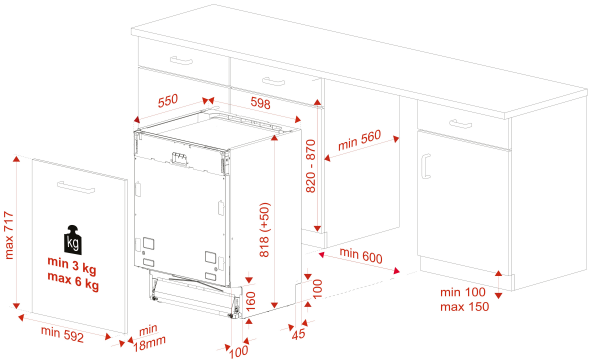

REFERENCE

REF: 114270009 EAN: 8434778013610

FEATURES

Built-in Dishwasher
Electronic control panel with display
Capacity: 14 plate settings
Washing programs: 7
Washing temperatures: 35°, 40°, 50°, 65°, 70°C
Motor Inverter
SmartSensor measure the level of dirtiness
MultiCleaner Sensor
FlexiSet 4 lower basket
Fast programs: 30 minutes
Special programs: AutoClean, AutoProgram, Intensive program, ECO program, 1-Hour, PreWash
Special functions: Half load, Express, PowerWash, ExtraDry
AquaStop and AquaSafe safety systems
Low salt and rinse indicator
Third sprayer
Push-up adjustable upper basket
Delay timer: 1-24 hours
Noise level: 46 dBA
Adjustable back feet from front
Sliding Detergent drawer
Column installation

DIMENSIONS

Product height (mm): 818
Product width (mm): 598
Product depth (mm): 550
Product length (mm):
Net weight (Kg): 35,9

TECHNICAL DETAILS

Energy Efficiency Class: A++
Energy Consumption (Kw/day): -
Water consumption (litres/year): 2660
Noise Level (dBA): 46
Power rate (V): 220-240
Frequency (Hz): 50

COLOURS