MAESTRO **IZS 86630 MST**

80 cm induction Flex hob with SlideCooking function and 4 cooking zones

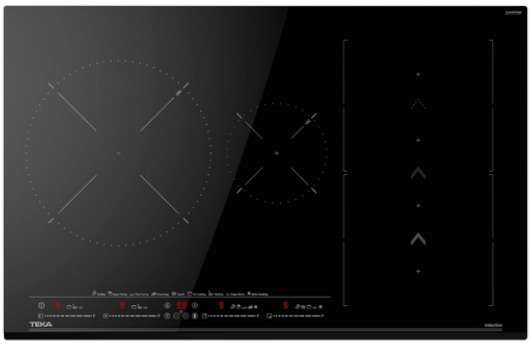

MultiSlider Autolock Power Power Plus Easy installation

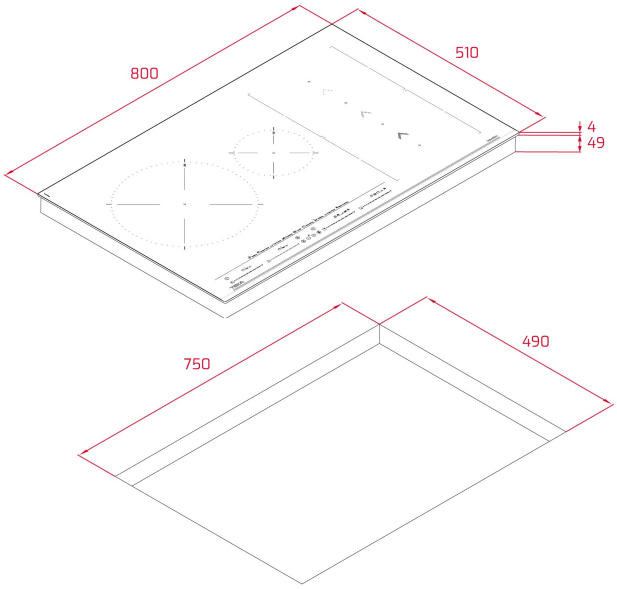

REFERENCE

REF: 112500030 EAN: 8434778011869

FEATURES

Urban Colors Edition
MasterSense Series
Flex Induction hob
SlideCooking function
Direct functions with temperature sensors: Poaching, confit, grilling, pan frying, deep frying, simmering, melting and keep warm
Touch Control MultiSlider
4 cooking zones
1 zone Ø 280 mm
2 zones Ø 228 x 200 mm
1 zone Ø 185 mm
Ceramic glass surface
Auto-lock safety system
Cooking timer
Power plus
Child lock
Residual heat indicator
Power management
Easy installation kit
Maximum nominal power 7200 W
Optional: Grilling plate
Optional: Teppanyaki

DIMENSIONS

Product height (mm): 53
Product width (mm): 800
Product depth (mm): 510
Product length (mm):
Net weight (Kg): 12,12

TECHNICAL DETAILS

Power rate (V): 220-240
Frequency (Hz): 50/60
Maximum Nominal Power (W): -

COLOURS

112500030 Black Glass