EWH 50 VE-D

Smart Control water heater with temperature LED indicator and 50L capacity

Dry Heating Protection | Humidity Control | Overheating Protection

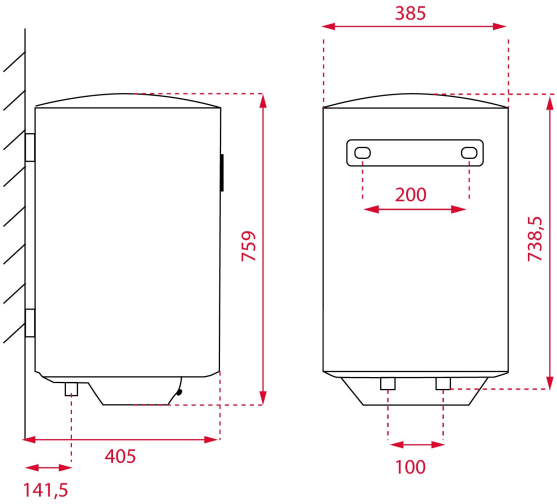

REFERENCE

REF: 42080320 EAN: 8421152149232

FEATURES

Smart series: Habits-based adapting system
Vertical installation
Capacity: 50 litres
Average number of users: 2-3
Tank ultra-resistant protective polish
Enamelled heating element
Temperature regulation 30º - 75º C
Max input pressure: 0.75 Mpa
Over-pressure protection
Over-heating protection
Humidity protection
Dry-heating protection
Power rate: 1500 W
Isolation thickness: 20 mm

DIMENSIONS

Product height (mm): 759
Product width (mm): 385
Product depth (mm): 385
Product length (mm):
Net weight (Kg): 17,8

COLOURS

42080320 White