RFC 60210 O1B
Regenerative recirculation kit without tube cover

REFERENCE

REF: 113290025 EAN: 8434778020328

FEATURES

Kit for the operation of the ceiling hood in recirculation mode
Returns the filtered air back to the kitchen through a grid installed in the fake ceiling
Included:
- Straight PVC tubes 600 mm (x2)
- Duct connector
- C1RES ceramic filter

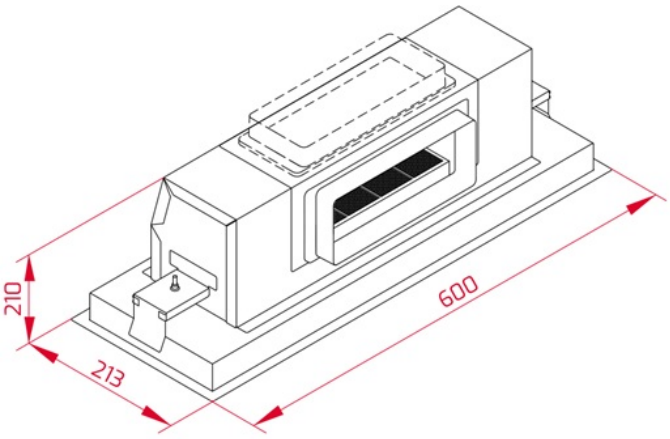

DIMENSIONS

Product height (mm): 600
Product width (mm): 213
Product depth (mm): 210
Product length (mm):
Net weight (Kg): 5.0

COLOURS

113290025 Stainless steel