**Diamond RS15 1B 1D 86**
Inset glass sink with one bowl and one drainer

200mm depth | Antibacterial | Lifetime warranty + SilentSmart | R15, easy to clean

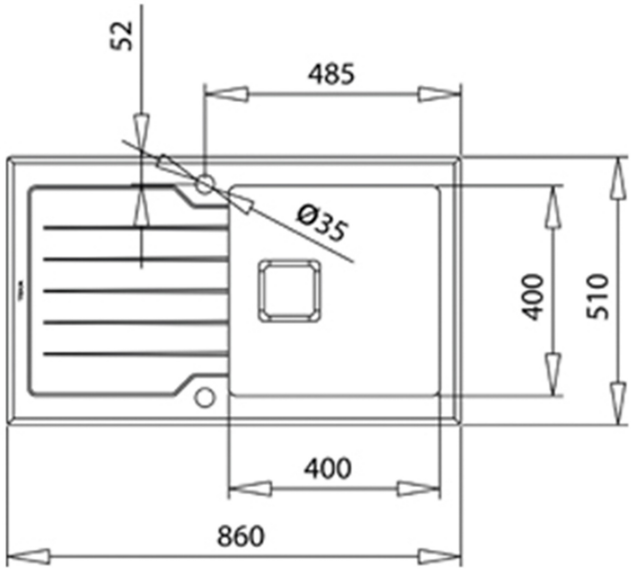


## REFERENCE

REF: 115100011 EAN: 8434778004731

## FEATURES

Diamond Series
Stainless steel and glass sink
One inox bowl and one drainer
Safety tempered glass with bevelled edges
Inset installation
Easy clean radius R15 corners
3½" SQ automatic basket waste with siphon
Decorative SQ cover
SilentSmart, 50% less noise
200 mm deep bowl
50 cm base unit

## DIMENSIONS

**Product height (mm):**
**Product width (mm):** 510
**Product depth (mm):** 200
**Product length (mm):** 860
**Net weight (Kg):** 3,48

## COLOURS

| | |
|---|---|
| 115100011 | Black glass |
| 115100012 | Stone grey glass |
| 115100012 | White glass |