TOTAL **ICC 915**

Metallic Edition single lever tap with swivel spout

REFERENCE

REF: 116030005 EAN: 8434778002980

FEATURES

Metallic Edition, Titanium Collection
High spout kitchen tap
Swivel Spout
Anti-scale aerator
Cartridge with ceramic discs of high resistance
Highly precise temperature control
Greater handling sensitivity with smoother movements
Surface resistant to daily use (PVD)
3/8" - 1/2" flexible inlet pipes

Fingerprint-Proof | Anti-Scale Aerator | Swivel Spout | PVD

DIMENSIONS

Product height (mm): 313
Product width (mm):
Product depth (mm):
Product length (mm):
Net weight (Kg): 1,65

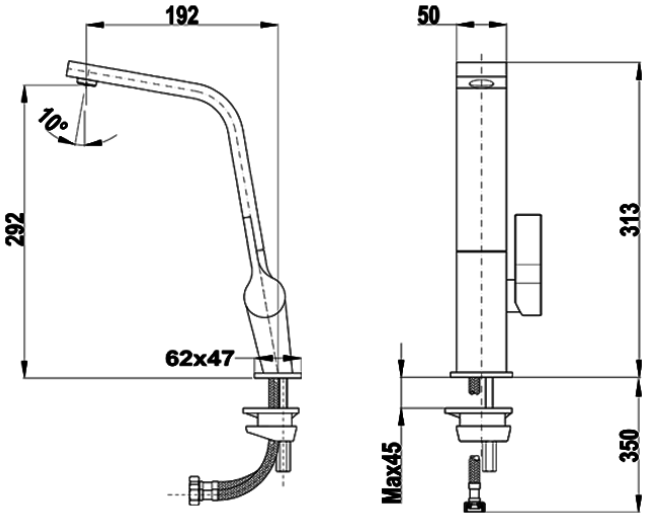

COLOURS

	116030005	Titanium
	116030004	Brass
	116030004	Chrome