**Be Linea RS15 50.40 PureClean**
Undermount installation stainless steel sink with polished finish

200mm depth | Antibacterial | R15, easy to clean

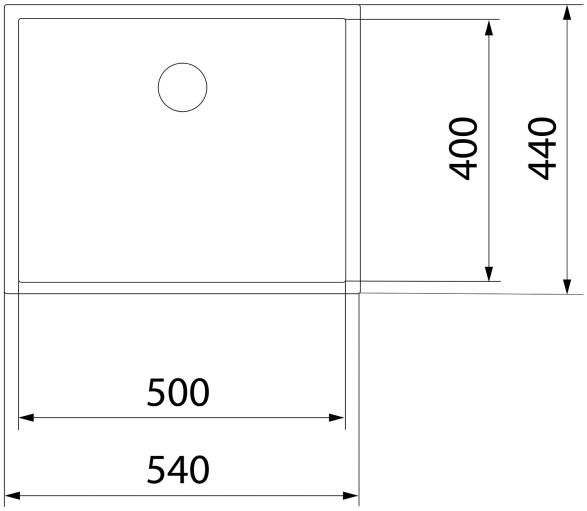


## REFERENCE

REF: 115000065 EAN: 8434778025293

## FEATURES

Be Linea Series
Stainless steel sink, polished finish
One bowl
Undermount installation
PureClean waterproof effect
Easy clean radius R15 corners
3½” PerfectFlow manual waste basket with siphon
HelixPro waste basket
SilentSmart, 50% less noise
200 mm deep bowl
60 cm base unit

## DIMENSIONS

**Product height (mm):**
**Product width (mm):** 440
**Product depth (mm):**
**Product length (mm):** 540
**Net weight (Kg):** 4,10

## COLOURS

115000065 Stainless steel