WMK 71240 WH

Washing machine with 12 kg capacity, touch control and 14 programs

Quick Cycle

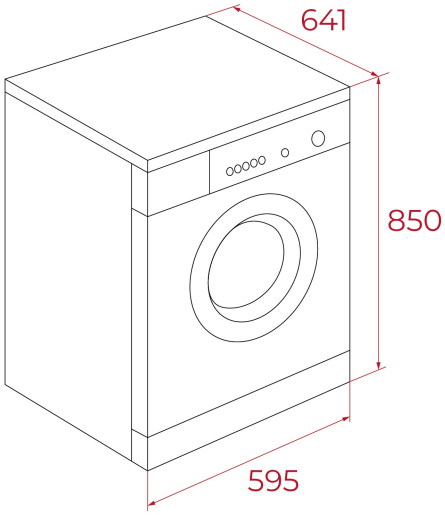

REFERENCE

REF: 113900019 EAN: 8434778032673

FEATURES

Free standing
Electronic control panel
Washing capacity: 12 kg
14 washing programs
Special programs: Fast: 15 minutes, ECO mode, Wool, Delicate, Cotton, BabyCare, Sterilization
Special functions: Delay timer, Speed wash, Steam, Extra rinse, Prewash, DrumClean reminder, Mute, Soil level, Night wash, Memory
Maximum spinning speed: 1400 RPM
Automatic water regulation
Automatic door lock safety system
Child lock
Balance control system
33 cm wide porthole door

DIMENSIONS

Product height (mm): 850
Product width (mm): 595
Product depth (mm): 660
Product length (mm):
Net weight (Kg): 73

TECHNICAL DETAILS

Energy efficiency class (UE 2019/2016): A
Washing performance Class: A
Spinning efficiency class: B
Water consumption (litres/year): /
Noise Level (dBA): + 80
Power rate (V): 220-240 V~
Frequency (Hz): 50 Hz

COLOURS

113900019 White