NEO HSC 6440 C SS

Multifunction compact oven with microwave, 11 cooking functions and HydroClean system

40L | HydroClean steam cleaning system | SurroundTemp

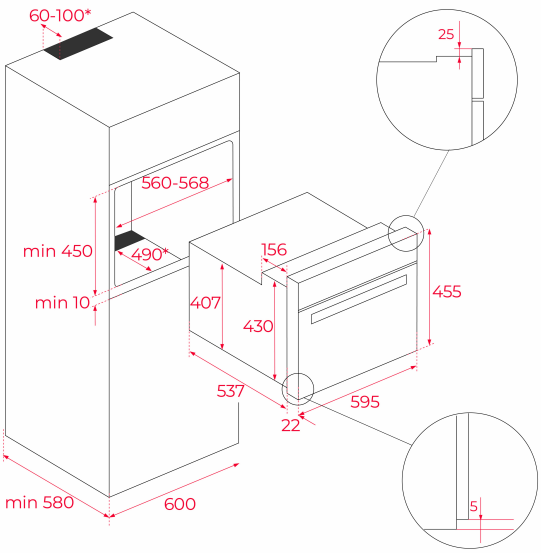

REFERENCE

REF: 111170002 EAN: 8434778034240

FEATURES

Neo Series
Multifunction SurroundTemp oven + Microwave
ThermoSeal System for a stable temperature inside
BrightClean Enamel for superior durability
FastClick System for easy-to-mount tray holders
Ergonomic and stylish handle
Wider LED display window
11 cooking functions
5 power levels + 1000 W microwave power
2500 W Grill
Defrost by time and weigh
HydroClean system
Touch control display with knobs
Electronic timer (Delay/Start function)
Chrome supports with 4 cooking levels
Removable triple glazed door
Automatic disconnection security system
Grill protection
Children safety lock
Door square pattern
Flat Stainless-Steel panel
Anti-tip glass tray and reinforced grid
Fingerprint proof stainless steel
Capacity (gross/net): 41 / 40 litres

DIMENSIONS

Product height (mm): 455
Product width (mm): 595
Product depth (mm): 559
Product length (mm):
Net weight (Kg): 30,0

TECHNICAL DETAILS

Energy Efficiency Class: -
Power rate (V): 220-240
Frequency (Hz): 50
Maximum Nominal Power (W): 3400

COLOURS

111170002 Stainless steel