RBF 43345 FI
Built-in bottom freezer refrigerator with secret zone

Motor Inverter

Easy 90

LED

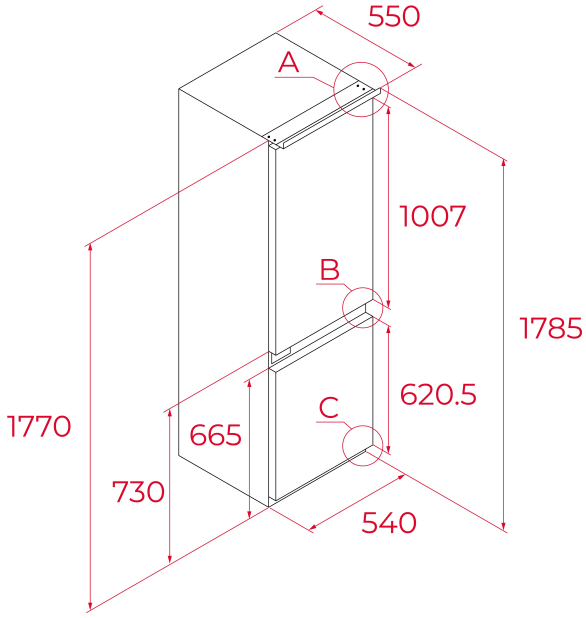

REFERENCE

REF: 113570026 EAN: 8434778033564

FEATURES

Built-in bottom freezer refrigerator
Manual defrost
Secret zone
Inverter motor
Inner control display
Electronic adjustable thermostat
Easy door opening at 90º
1 FreshBox drawer
1 FlipBox
2 freezer drawers with metallic finishing
4 safety glass shelves with metallic finishing
Sliding installation
Reversible doors
Fast freezing and fast cooling function
Front and back adjustable feet
LED Illumination
Climate class: SN/N/ST/T
Total net capacity: 271 litres
Ice cube tray included

DIMENSIONS

Product height (mm): 1785
Product width (mm): 540
Product depth (mm): 550
Product length (mm):
Net weight (Kg): 55

TECHNICAL DETAILS

Energy efficiency class (UE 2019/2016): E
Climate Class: SN/N/ST/T
Energy Consumption (Kw/day): 0.619
Annual Consumption (kWh/year): 226
Freezing Capacity: 3.6
Noise Level (dBA): 38(C)
Power rate (V): 220V-240V~
Frequency (Hz): 50Hz

COLOURS

113570026 White