RFD 77820 GBK EU French Door LongLife No Frost Refrigerator 190cm with 4 doors and inverter motor

Motor Inverter | On Holidays function | Gourmet Box | IonClean Technology | LED | LongLife No Frost | Vitacare Box

DESCRIPTION	French Door LongLife No Frost Refrigerator 190cm with 4 doors and inverter motor
LIFE STYLE	Maestro
COLOURS	
REFERENCE	REF. 113430004 EAN. 8434778001471

RFD 77820 GBK EU

FEATURES

Urban Colors Edition
Free Standing french door refigerator
LongLife No Frost with 3 independent circuits
IonClean technology
Inverter motor
Outer control display
Electronic adjustable thermostat
Gourmet box + 2 VitaCare Box drawers
Safety glass shelves
On holidays function
Fast freezing and fast cooling function
Front adjustable feet
LED Illumination
Climate class: SN/N/ST/T
Total capacity (gross/net): 582 / 500 litres
Bottle rack and ice cube tray included

RFD 77820 GBK EU

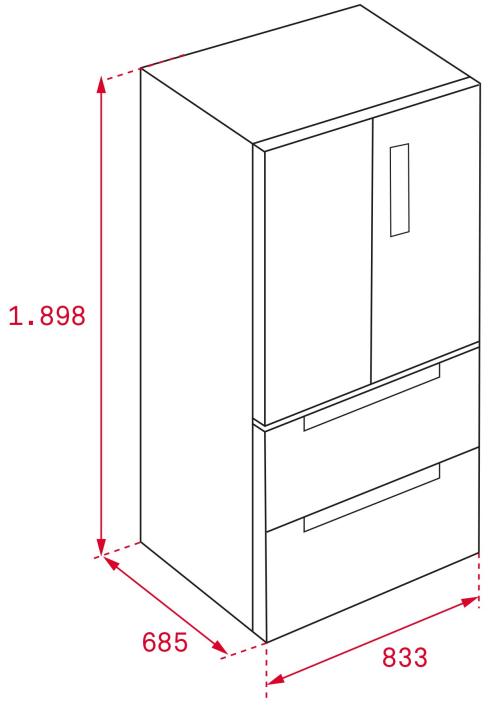

DIMENSIONS

Product height (mm): 1898
Product width (mm): 833
Product depth (mm): 685
Product length (mm):
Net weight (Kg): 136

TECHNICAL DETAILS

PRODUCT SHEET

Cooling system: LongLife No Frost
No Frost In Refrigerator Compartment: Yes
No Frost in chiller: Yes
No Frost in freezer compartment: Yes
Total gross capacity (litres): 582
Refrigerator compartment capacity (litres): 304
Chilling Compartment Capacity (litres): 31
Freezer compartment capacity (litres): 165
Freezer classification: 4
Freezing capacity: 13
Annual Consumption (kWh/year): 314
Temperature Rise Time (h): 15
Climate class: N/T
Noise level (dB): 41
Certificates: CB/DE

POWER SUPPLY

Frequency (Hz): 50
Power rate (V): 230
Power rate (W): 250
Defrost element power (W): 250

Energy consumption (kw/day): 0,915
Cable Connection Length (cm): 1750

FEATURES

Type of installation: Free standing
Automatic defrosting in the refrigeration compartment: Yes
Automatic defrosting in the freezer compartment: Yes
Electronic adjustable thermostat: Yes
Display on door: Yes
Antibacterial treatment: IonClean
Freezing set button: Yes
Cooling set button: Yes
Lock function: Yes
Fast freezing: Yes
Fast Cooling Function: Yes
On Holidays Function: Yes
Inner light: Yes
Type of inner light: LED
Integrated handle: Yes

CONTROL INDICATOR LIGHTS

Operating light fridge: Yes
Operating light freezer: Yes
Freezer compartment temperature display: Yes
Fast freezing indicator: Yes
Acoustic alarm: Yes
Visual alarm: Yes

EQUIPMENT

Antibacterial gasket: Yes
Multipurpose compartment: NO
Ice cubes tray: 1
Bottle rack type: CHROMED
Dairy covered compartment: Yes
Adjustable Feet Back: Yes
Adjustable feet front: Yes
Refrigerator adjustable shelves: Yes
Vegetable drawers: 3

RFD 77820 GBK EU
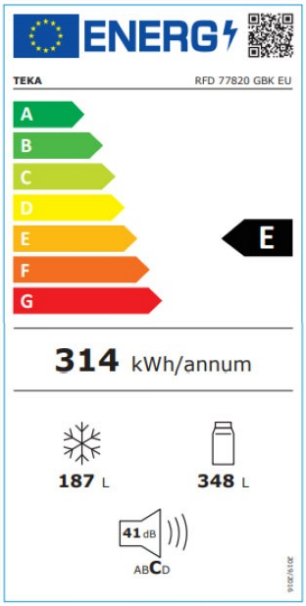
ENERGY LABEL