RBF 78620 GBK EU Long Life No Frost Free standing Combi Refrigerator with IonClean

Motor Inverter | On Holidays function | Eco Function | IonClean Technology | LED | LongLife No Frost | Vitacare Box | Zero Box

22L

DESCRIPTION	Long Life No Frost Free standing Combi Refrigerator with IonClean
LIFE STYLE	Maestro
COLOURS	
REFERENCE	REF. 113400006 EAN. 8434778013405

RBF 78620 GBK EU

FEATURES

Urban Colors Edition
Free Standing bottom freezer refrigerator
LongLife No Frost with 2 independent circuits
IonClean technology
Outer control display
Electronic adjustable thermostat
VitaCare Box drawer + ZeroBox drawer
Safety glass shelves
On holidays function
Fast freezing and fast cooling function
Flexi rack
Front adjustable feet
ECO Function
LED Illumination
Reversible doors
Climate class: T/SN
Total capacity (gross/net): 379 / 360 litres
Bottle rack and ice cube tray included

RBF 78620 GBK EU

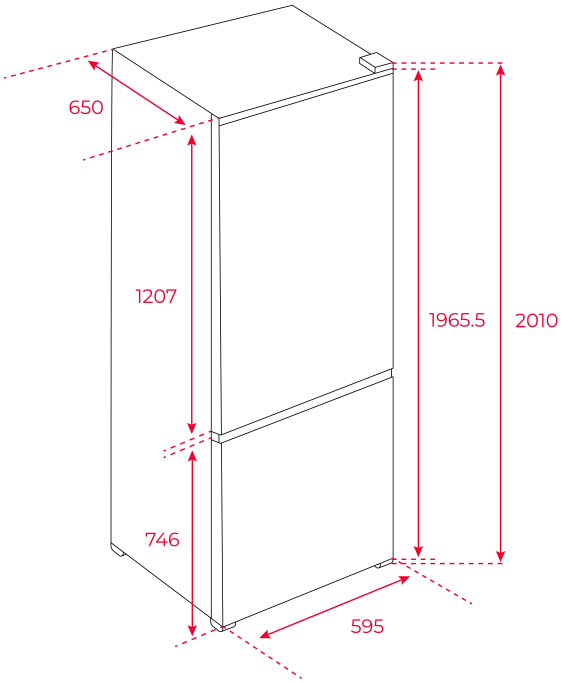

DIMENSIONS

Product height (mm): 2010
Product width (mm): 595
Product depth (mm): 660
Product length (mm):
Net weight (Kg): 83

TECHNICAL DETAILS

PRODUCT SHEET

Cooling system: LongLife No Frost
No Frost In Refrigerator Compartment: Yes
No Frost in chiller: Yes
No Frost in freezer compartment: Yes
Total gross capacity (litres): 379
Refrigerator compartment capacity (litres): 266
Chilling Compartment Capacity (litres): 22
Freezer compartment capacity (litres): 94
Freezer classification: 4
Freezing capacity: 8
Annual Consumption (kWh/year): 250,09
Temperature Rise Time (h): 18
Climate class: SN/T
Noise level (dB): 42

POWER SUPPLY

Frequency (Hz): 50
Power rate (V): 220-240
Power rate (W): 162
Defrost element power (W): 145
Energy consumption (kw/day): 0,75

Plug type: EU F TYPE

FEATURES

Type of installation: Free standing
Automatic defrosting in the refrigeration compartment: Yes
Automatic defrosting in the freezer compartment: Yes
Electronic control: Yes
Control panel: TOUCH
Electronic adjustable thermostat: Yes
Display on door: Yes
Antibacterial treatment: IonClean
Freezing set button: Yes
Cooling set button: Yes
Lock function: Yes
Fast freezing: Yes
Fast Cooling Function: Yes
On Holidays Function: Yes
ECO function: Yes
Inner light: Yes
Type of inner light: SIDE LED
Reversible doors: Yes
Integrated handle: Yes

CONTROL INDICATOR LIGHTS

Operating light fridge: Yes
Operating light freezer: Yes
Freezer compartment temperature display: Yes
Fast freezing indicator: Yes
Acoustic alarm: Yes
Visual alarm: Yes

EQUIPMENT

Antibacterial gasket: Yes
Multipurpose compartment: NO
Ice cubes tray: 1
Bottle rack type: CHROMED
FlexiRack: Yes
Adjustable Feet Back: Yes
Adjustable feet front: Yes
Refrigerator adjustable shelves: Yes
Vegetable drawers: 2

RBF 78620 GBK EU
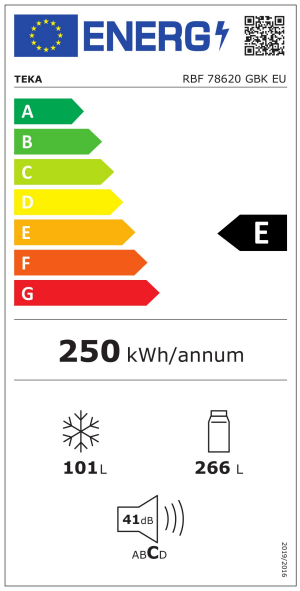
ENERGY LABEL