VS 152 GS Vacuum sealing machine with kitchen scale and soft-close

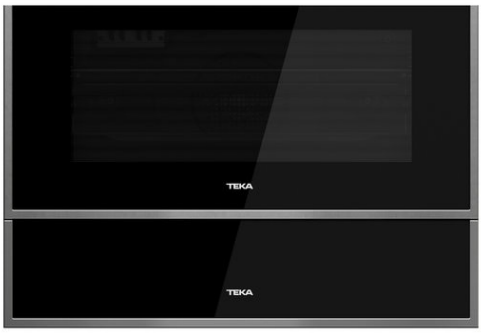

DESCRIPTION	Vacuum sealing machine with kitchen scale and soft-close
LIFE STYLE	Maestro
COLOURS	
REFERENCE	REF. 40589951 EAN. 8421152145630

VS 152 GS

FEATURES

Vacuum sealer
Kitchen scale
Push-pull opening system
2 roll holders

VS 152 GS

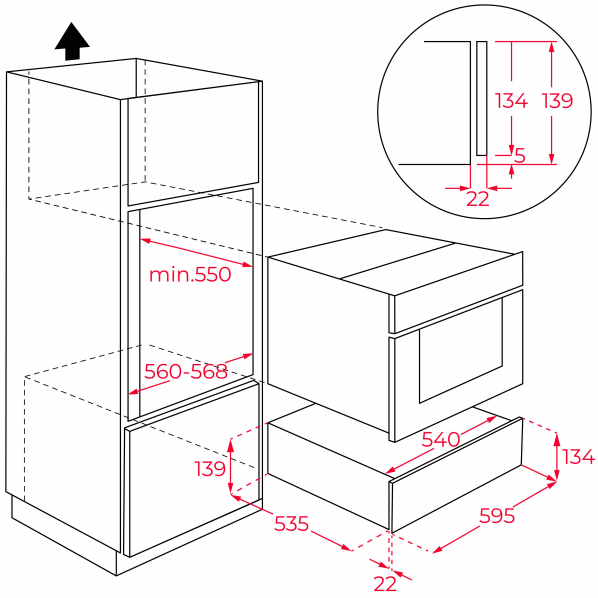

DIMENSIONS

Product height (mm): 140
Product width (mm): 595
Product depth (mm): 557
Product length (mm):
Net weight (Kg): 18

TECHNICAL DETAILS

FEATURES	**Certificates:** CE **Number of cavities:** 2 **Number of guide levels:** 0 **Number of guide levels (lower cavity):** 0 **Door handle:** Push-pull
ELECTRIC CONNECTION	**Maximum Nominal Power (W):** 115 **Frequency (Hz):** 50 **Power rate (V):** 220-240 **Cable Connection Length (cm):** 110 **Plug:** Yes **Plug type:** Schuko