TZ 3210 30cm Modular Vitroceramic Hob with 2 zones

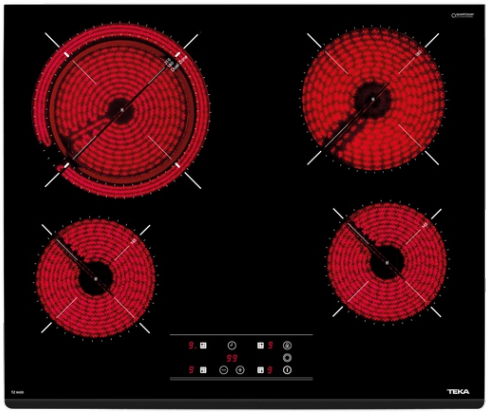

Autolock

Easy installation system

DESCRIPTION	30cm Modular Vitroceramic Hob with 2 zones
LIFE STYLE	Easy
COLOURS	
REFERENCE	REF. 40204360 EAN. 8421152153468

TZ 3210

FEATURES

Modular Vitroceramic hob
Touch Control
2 cooking zones:
1 high light Ø 145 mm
1 high light Ø180 mm
Child lock
Residual heat indicators
Optional junction kit
Maximum nominal power: 3.000 W

TZ 3210

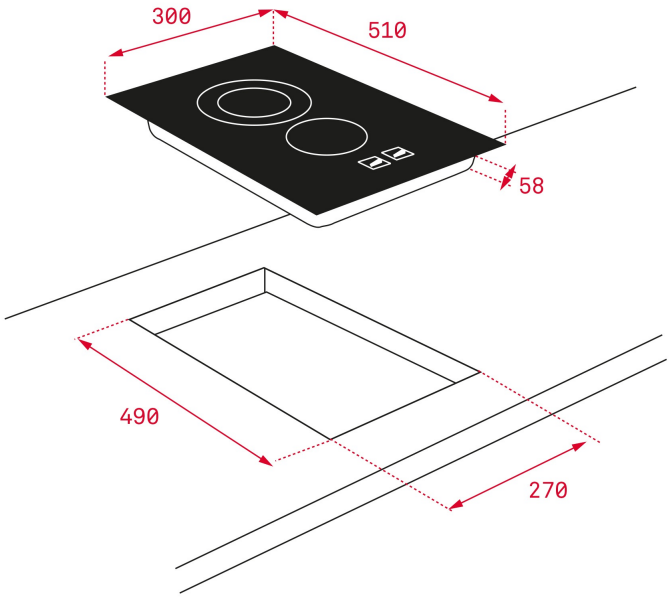

DIMENSIONS

Product height (mm): 58
Product width (mm): 300
Product depth (mm): 510
Product length (mm):
Net weight (Kg): 4,26

TECHNICAL DETAILS

FITTING MEASURES	**Built-in Width (mm):** 270 **Built-in Depth (mm):** 490 **Built-in height (mm):** 58
FEATURES	**Number of electric power levels:** 9
ELECTRIC CONNECTION	**Frequency (Hz):** 50/60 **Power rate (V):** 220-240 **Cable Connection Length (cm):** 110 **Maximum Nominal Power (W) (Electric hob):** 3000
COOKING ZONES	**Cooking Zones:** 2 **Energy consumption for the whole hob, Wh/Kg:** 188,18
SAFETY SYSTEMS	**Residual heat indicator (Gas):** Yes **Residual heat indicator (Electric hob):** Yes

Automatic safety disconnection (Auto Lock) (Electric hob): Yes
Safety Blocking: Yes
Child lock: Yes

FINISH

Surface finishing: Front bevelled glass
Surface type: Ceramic Glass (4mm)
Easy installation system: Yes

ACCESSORIES

Junction Kit: Optional
Teppan Yaki: Optional