FORMENTERA FORMENTERA BATH/SHOWER MIXER WHITE

DESCRIPTION	FORMENTERA BATH/SHOWER MIXER WHITE
LIFE STYLE	Formentera
COLOURS	
REFERENCE	REF. 62121020BC EAN. 8413509215196

FORMENTERA

FEATURES

Without shower set
Equipped with noise reducers
Anti-scale aerator
Automatic diverter integrated in the mixer’s body
Quality Certification: ACS

FORMENTERA

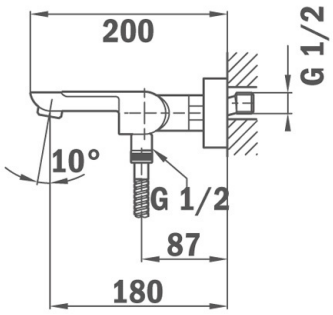

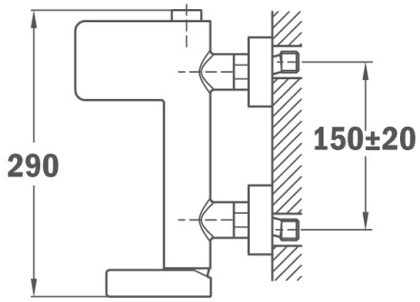

DIMENSIONS

Product height (mm):
Product width (mm):
Product depth (mm):
Product length (mm):
Net weight (Kg):

TECHNICAL DETAILS

MODELS	**Type of installation:** Wall-mounted