HLB 850 Multifunction SurroundTemp A+ oven with 9 cooking functions

70L capacity | Plus extension telescopic guide | HydroClean | SoftClose | SurroundTemp, extra rear resistance for a uniform cooking

DESCRIPTION	Multifunction SurroundTemp A+ oven with 9 cooking functions
LIFE STYLE	Maestro
COLOURS	
REFERENCE	REF. 41560291 EAN. 8421152154533

HLB 850

FEATURES

Multifunction SurroundTemp – 9 Cooking functions
Teka HydroClean®PRO cleaning system
A+ Energy class: up to 20% less consumption
Capacity, gross/net: 71/70 litres
Touch Control with electronic timer
Quick heating
Children safety block
Automatic disconnection security system
Triple glazed door
SoftClose system
1 Plus-Extension telescopic guide, 5 cooking levels
Anti deep tray and reinforced grid
Dynamic ventilation

HLB 850

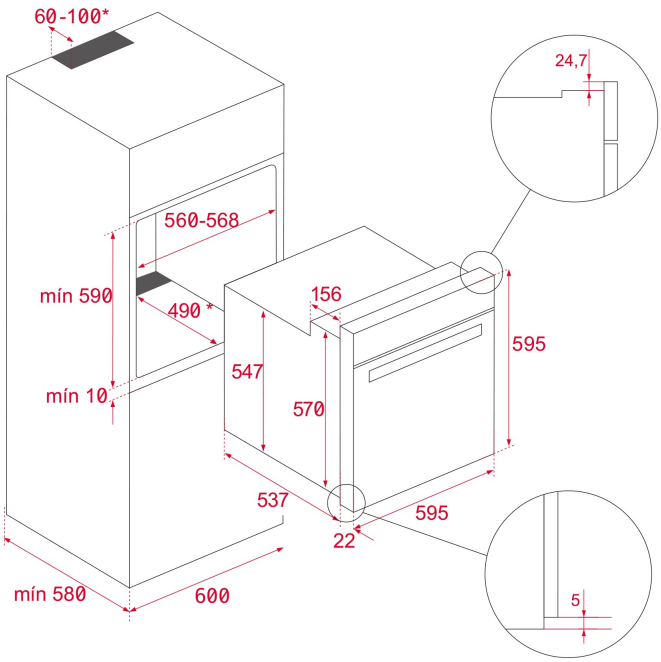

DIMENSIONS

Product height (mm): 595
Product width (mm): 595
Product depth (mm): 537+22
Product length (mm):
Net weight (Kg): 28

TECHNICAL DETAILS

FEATURES

Certificates: N / CE / CCA / CB/ JAS-ANZ
Number of cavities: 1
Type of inner light: Halogen
Inside light position: RIGHT TOP CORNER
Enamelled cavity: Yes
Min. Temperature Regulator (ºC): 50
Max. Temperature Regulator (ºC): 250
Function selector: 11+0
Number of cooking functions: 9
Top + Bottom function: Yes
Grill function: Yes
MaxiGrill function: Yes
MaxiGrill + Fan function: Yes
Bottom function: Yes
Bottom + TURBO (Pizza) function: Yes
Turbo function: Yes
ECO function: Yes
Mechanical quick heating: Yes
Touch Control Programmer: Yes
Knobs type: MMX FIX knurling printed
Removable chromed tray guides: Yes
Number of guide levels: 5

Easy slide telescopic guides: Yes
SoftClose: Yes

ELECTRIC CONNECTION

Maximum Nominal Power (W): 3215
Frequency (Hz): 50/60
Power rate (V): 220-240
Cable Connection Length (cm): 110
Inside light Consumption (W): 25

ENERGY CONSUMPTION

Energy consumption per cycle in conventional mode (kWh): 0.81
Energy consumption per cycle in fan-forced convection mode (kWh): 0,68
Bottom Heating Element (W): 1150
Grill (W): 1400
Maxi Grill (W): 2500
Traditional (W): 2550
Turbo (W): 2000
Multifunction Turbo (W): 22
Cooling Fan Motor (W): 18

SAFETY SYSTEMS

Panel blocking system: Yes
Grill protection: Yes
Anti-tip tray system: Yes
Safety Thermostat: Yes

CLEANING SYSTEM

Crystal Clean Enamel (Slippery): Yes
Hydroclean PRO: Yes

ACCESSORIES

Baking Tray: 1
Deep Tray (50 mm): 1
Reinforced grid: 1

ENERGY EFFICIENCY

Energy Efficiency Class: A+
Energy Efficiency Index (EEI): 81

HLB 850
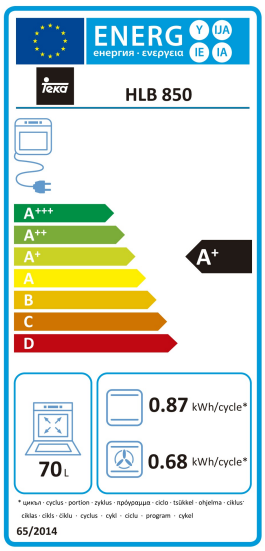
ENERGY LABEL