EFX 90 4G 1H AI AL DR 90cm Mix hob with 4 high efficiency LPG gas burners and 1 vitroceramic with cast iron grids

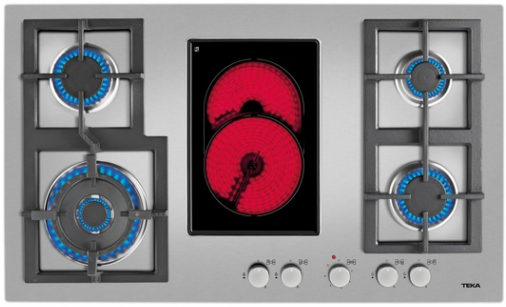

Integrated auto-ignition system

Autolock

Easy installation system

DESCRIPTION	90cm Mix hob with 4 high efficiency LPG gas burners and 1 vitroceramic with cast iron grids
LIFE STYLE	Total
COLOURS	
REFERENCE	REF. 40214900 EAN. 8421152126745

EFX 90 4G 1H AI AL DR

FEATURES

Metallic frontal knobs
High efficiency burners
Auto–ignition
Gas burners: Auxiliary burner, 1,00 Kw, 2 Semi–fast burners, 1,75 Kw., Double ring burner , 4,0 Kw
1 cooking zone: 1 high light oval (2,2 kW)

EFX 90 4G 1H AI AL DR

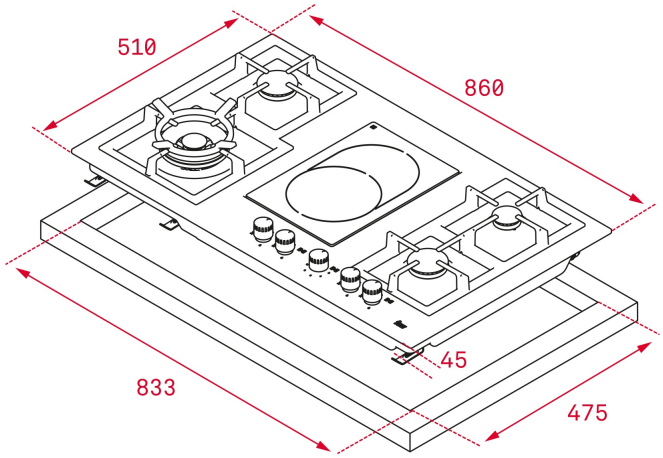

DIMENSIONS

Product height (mm): 91
Product width (mm): 860
Product depth (mm): 510
Product length (mm):
Net weight (Kg): 13,35

TECHNICAL DETAILS

FITTING MEASURES	**Built-in Width (mm):** 833 **Built-in Depth (mm):** 475 **Built-in height (mm):** 45
FEATURES	**Gas type:** Butane **Maximum nominal power (W) (Gas):** 8500 **Autoignition:** Yes **Number of electric power levels:** 6
ELECTRIC CONNECTION	**Maximum Nominal Power (W):** 2200 **Frequency (Hz):** 50/60 **Power rate (V):** 220-240 **Cable Connection Length (cm):** 110
COOKING ZONES	**Cooking Zones:** 5

SAFETY SYSTEMS	**Automatic safety disconnection (Auto Lock) (Gas):** Yes **Residual heat indicator (Electric hob):** Yes **Automatic safety disconnection (Auto Lock) (Electric hob):** Yes
FINISH	**Surface finishing:** Brushed stainless steel **Surface type:** Stainless Steel **Easy installation system:** Yes
ACCESSORIES	**Grid type:** Conected Grid **Wok support:** Optional **Junction Kit:** NO **Cast Iron Grids:** Yes **Teppan Yaki:** NO