MT Plus3 Mixer

DESCRIPTION	Mixer
LIFE STYLE	Maestro
COLOURS	
REFERENCE	REF. 969113HD EAN. 8413509186113

MT Plus3

FEATURES	Mixer Swivel spout 3/8" flexible inlet pipes Anti-scale aerator

MT Plus3

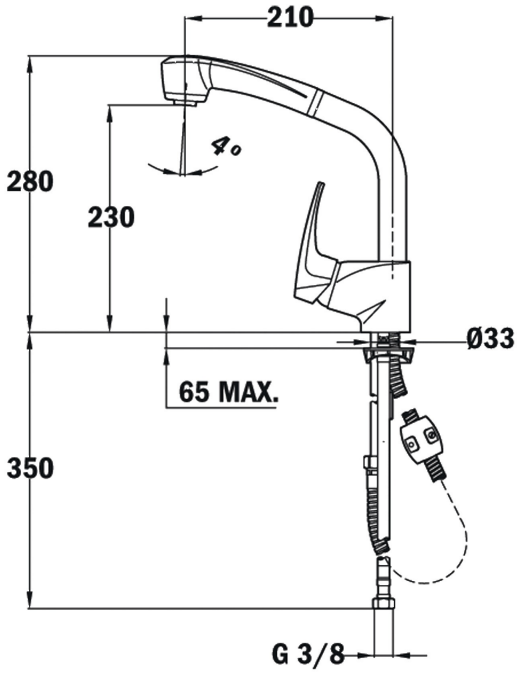

DIMENSIONS

Product height (mm):
Product width (mm):
Product depth (mm):
Product length (mm):
Net weight (Kg): 3