SQUARE 50.40 TG Undermount Tegranite Sink with one bowl

Main bowl depth: 200mm | High quality colour intensity | Easy to clean | Food safe | Scratch Proof

DESCRIPTION	Undermount Tegranite Sink with one bowl
LIFE STYLE	Maestro
COLOURS	
REFERENCE	REF. 115230020 EAN. 8434778007374

SQUARE 50.40 TG

FEATURES

Tegranite+ sink, One bowl
Undermount installation
High resistance surface to impacts, thermal shocks and high temperatures
Excellent UV resistance against decoloring
Bacteria-free surface very easy to clean, 80% quartz and resins
3½" manual basket waste with overflow and siphon
60 cm base unit
Thickness: 8 mm
Packaging: Individual carton box

SQUARE 50.40 TG

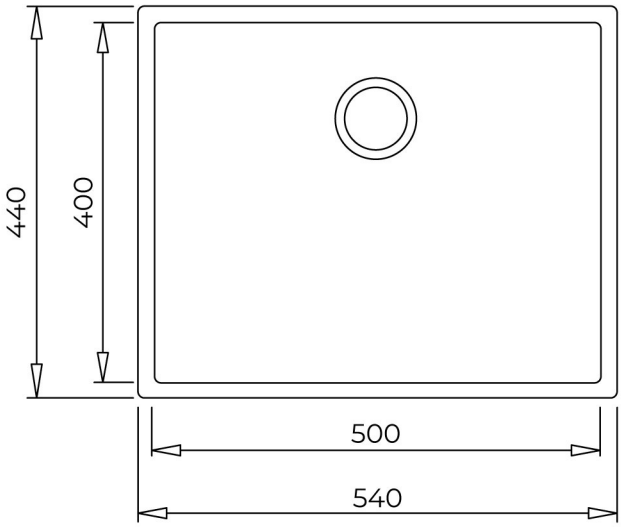

DIMENSIONS

Product height (mm):
Product width (mm): 440
Product depth (mm): 200
Product length (mm): 540
Net weight (Kg): 8,17

TECHNICAL DETAILS

MAIN BOWL	**Main Bowl Length (mm):** 500 **Main Bowl Width (mm):** 400 **Main Bowl Depth (mm):** 200
OTHER FEATURES	**Material:** Tegranite+ **Type of installation:** Undermount **Valve hole type:** 3½" **Overflow hole:** Round **Sink Bowl / Top thickness (mm):** 8,0
OTHERS	**Base unit (cm):** 60
SINK LAY OUT	**Number of bowls:** 1 **Number of drainers:** 0
ACCESSORIES	**Installation clips:** Yes **Siphon:** Yes