ML 825 TFL BK-SS

Built-in microwave with grill and touch control

Defrost By Time | Defrost By Weight | Direct Access Menu | Electronic Door Opening

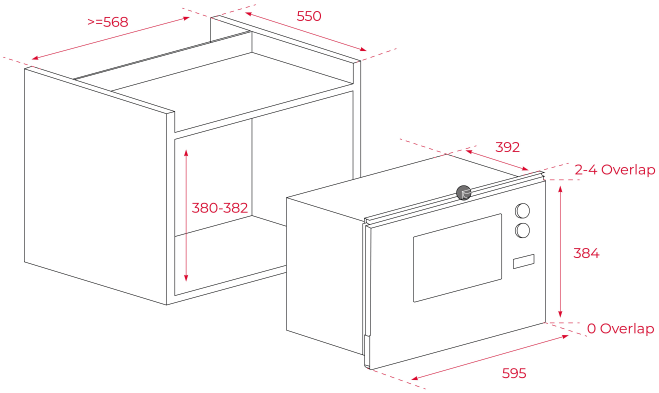

REFERENCE

REF: 40590640 EAN: 8421152149188

FEATURES

Built-in Microwave + Grill
3 cooking functions
8 direct access menus
2 memories
5 power levels, 1450 W
Grill power: 1000 W
Defrost by time and weight
Touch control display with minute minder
Double glazed door with right opening
Electronic door opening
Children safety lock
Automatic disconnection when open door
Incandescent inner light
Quick start
Capacity (gross/net): 25 / 23.6 litres
Stainless steel cavity

DIMENSIONS

Product height (mm): 384
Product width (mm): 595
Product depth (mm): 392
Product length (mm):
Net weight (Kg): 17,6

TECHNICAL DETAILS

MWO Power (W): 900
Frequency (Hz): 50
Maximum Nominal Power (W): 1450
Grill (W): 1000

COLOURS

40590640 Black glass with frame