HSB 750 G SS

Multifunction gas oven with electric grill and 5 cooking functions



REFERENCE

REF: 111040003 **EAN:** 8434778000108

FEATURES

Multifunction oven
Gas oven with gas grill
5 cooking functions
Mechanical control knobs
Mechanical timer
Chrome supports with 5 cooking levels
Removable double glazed door
Manual quick preheating
Anti-tip deep tray
Capacity (gross/net): 71 / 65 litres

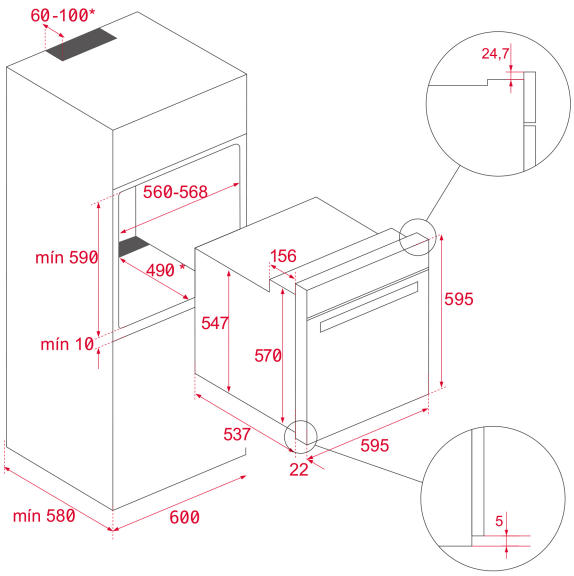

DIMENSIONS

Product height (mm): 595
Product width (mm): 595
Product depth (mm): 543+22
Product length (mm):
Net weight (Kg): 41

TECHNICAL DETAILS

Energy Efficiency Class: A+
Power rate (V): 127
Frequency (Hz): 60
Maximum Nominal Power (W): 1470

COLOURS

111040003 Stainless steel