RMF 74810 SS

Full No Frost multidoor bottom freezer refrigerator with inverter motor

Motor Inverter

On Holidays function

Eco Function

Fresh Box

LED

LongLife No Frost

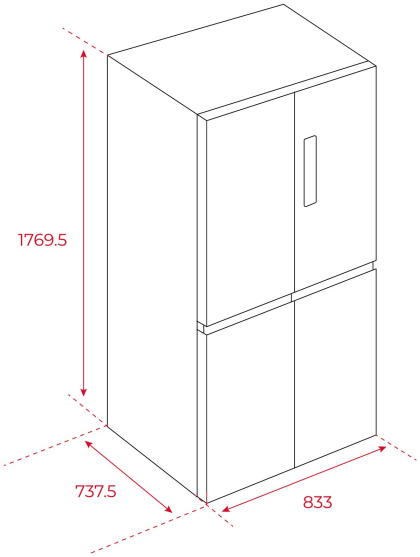

REFERENCE

REF: 113430015 EAN: 8434778003864

FEATURES

Free Standing bottom freezer refrigerator
LongLife No Frost with 2 independent circuits
Inverter motor
Outer control display
Electronic adjustable thermostat
2 FreshBox drawers
2 safety glass shelves
On holidays function
Fast freezing and fast cooling function
Front adjustable feet
ECO Function
LED Illumination
Climate class: T/ST/N
Total capacity (gross/net): 544 / 493 litres
2 Ice cube trays and twister ice maker included

DIMENSIONS

Product height (mm): 1775
Product width (mm): 833
Product depth (mm): 740
Product length (mm):
Net weight (Kg): 99

TECHNICAL DETAILS

Energy efficiency class (UE 2019/2016): -
Climate Class: T、ST、N
Energy Consumption (Kw/day): 1,39
Annual Consumption (kWh/year): 507
Freezing Capacity: 18
Noise Level (dBA): 45
Power rate (V): 115
Frequency (Hz): 60

COLOURS

113430015 Stainless steel