CLC 8350 MC BK E01

Urban Colors Edition. Multi-capsule and ground built-in coffee machine with 19 bar pump pressure

Capsules Ground coffee

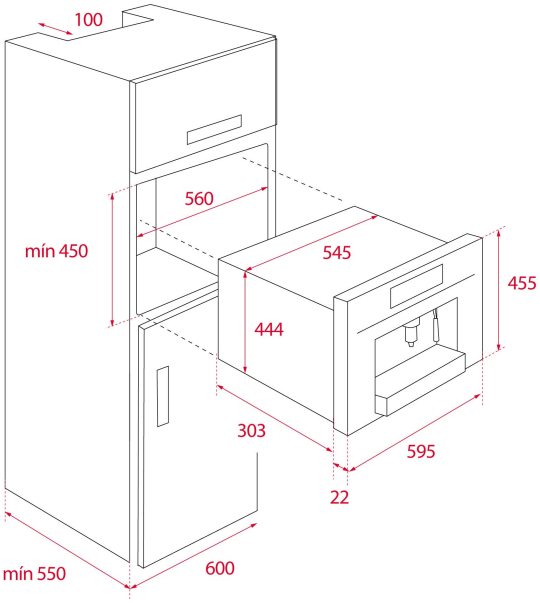

REFERENCE

REF: 111630005 EAN: 8434778019704

FEATURES

Urban Colors Edition
Multi capsule and ground built-in coffee machine
Coffee size regulation
Touch control display with knobs
Capacity: 1 cup
Adjustable height system for different cup sizes
Milk frother and hot water pipe
Availability for ground coffee
3 storage drawers
19 bar pump pressure
1 litre water tank
Descaling function
Capsule adaptors suitable for: Nespresso®, Lavazza®, Caffitaly®, E.S.E.

DIMENSIONS

Product height (mm): 455
Product width (mm): 595
Product depth (mm): 330
Product length (mm):
Net weight (Kg): 18,7

TECHNICAL DETAILS

Power rate (V): 230
Frequency (Hz): 50
Maximum Nominal Power (W): 2200

COLOURS

111630005 Black