MAESTRO **RSL 75640 SS**

Free standing single door fridge with full No Frost

Fresh Box

Full No Frost

LED

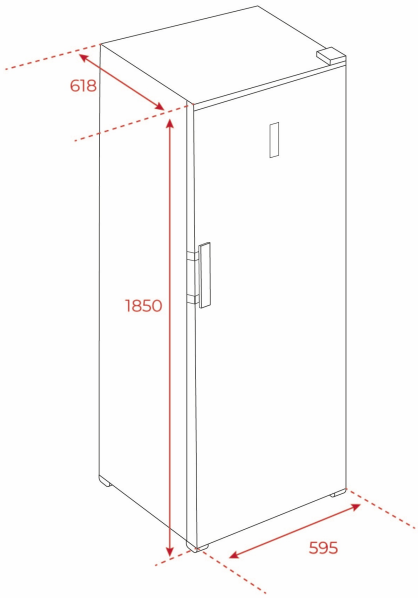

REFERENCE

REF: 113300005 EAN: 8434778023053

FEATURES

Free Standing single door fridge
Full No Frost
Outer control display
Electronic adjustable thermostat
2 FreshBox drawers
Safety glass shelves
Front adjustable feet
LED Illumination
Reversible doors
Climate class: SN/N/ST/T
Total capacity (net):362 litres

DIMENSIONS

Product height (mm): 1850
Product width (mm): 595
Product depth (mm): 618
Product length (mm):
Net weight (Kg): 59

TECHNICAL DETAILS

Energy efficiency class (UE 2019/2016): G
Climate Class: SN/N/ST/T
Energy Consumption (Kw/day): 0,324
Annual Consumption (kWh/year): 118
Freezing Capacity: NA
Noise Level (dBA): 41
Power rate (V): 220-240
Frequency (Hz): 50

COLOURS

113300005 Stainless Steel