ARK 938

Single lever kitchen tap with pull-out shower





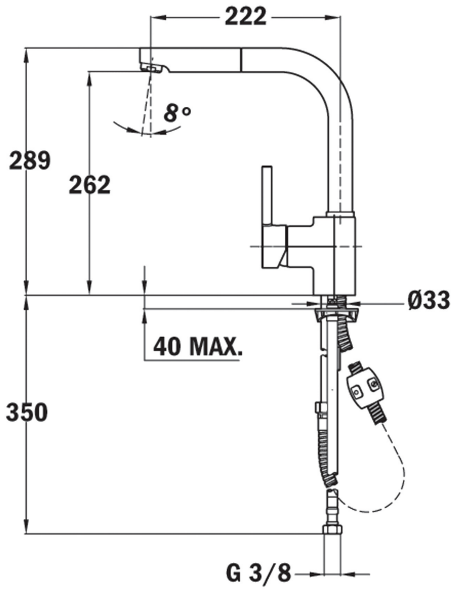

REFERENCE

REF: 23938120N **EAN:** 8421152134207

FEATURES

High spout pull-out kitchen tap
Swivel spout
Anti-scale aerator
Pull-out 1 function: normal
Extra resistant flexible hose
Cartridge with ceramic discs of high resistance
Highly precise temperature control
Greater handling sensitivity with smoother movements
3/8" flexible inlet pipes

DIMENSIONS

Product height (mm): 289
Product width (mm):
Product depth (mm):
Product length (mm):
Net weight (Kg): 2,7

COLOURS

	23938120N	Black
	23938120W	White
	239381200	Chrome
	23938120Q	Metallic black
	23938120I	Stainless steel
	23938120CN	Carbon