IC 915
Single lever kitchen tap with high spout swivel aerator

Anti-scale aerator Swivel spout

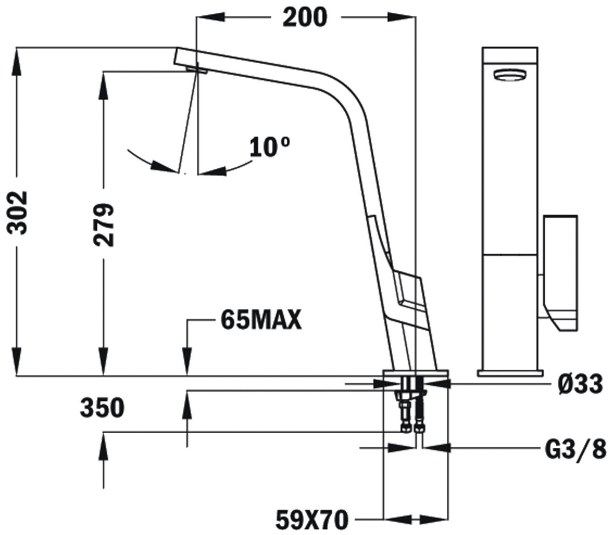

REFERENCE

REF: 33915020W EAN: 8421152091357

FEATURES

High spout kitchen tap
Flat design
Swivel Spout
Anti-scale aerator
Cartridge with ceramic discs of high resistance
Highly precise temperature control
Greater handling sensitivity with smoother movements
3/8" flexible inlet pipes

DIMENSIONS

Product height (mm): 302
Product width (mm):
Product depth (mm):
Product length (mm):
Net weight (Kg): 2,4

COLOURS

33915020W White
339150200 Black
339150200 Chrome