SP 995 I
Kitchen tap mixer with high swivel spout

Anti-scale aerator

Swivel spout

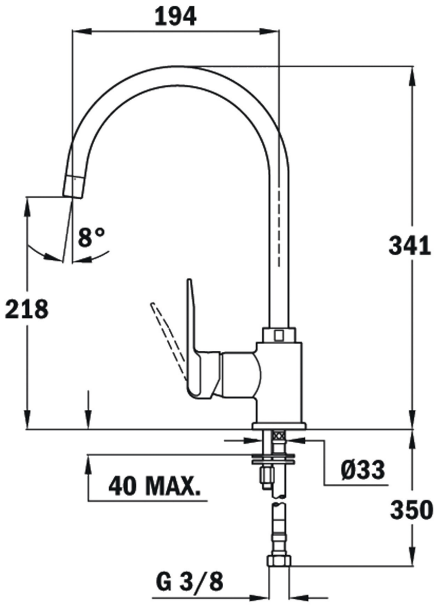

REFERENCE

REF: 55995020I EAN: 8421152134764

FEATURES

High spout kitchen tap
Swivel spout
Anti-scale aerator
Cartridge with ceramic discs of high resistance
Highly precise temperature control
Greater handling sensitivity with smoother movements
3/8" flexible inlet pipes

DIMENSIONS

Product height (mm): 341
Product width (mm):
Product depth (mm):
Product length (mm):
Net weight (Kg): 1,55

COLOURS

55995020I	Stainless steel
559950200	Metallic black
559950200	Topasbeige
559950200	Sandbeige
559950200	Carbon
559950200	Chrome