Astral 45 B-TG 1B 1D

Inset Tegranite sink with one bowl and one drainer

200mm depth | Colour Intensity | Easy Clean | Food safe | High resistance

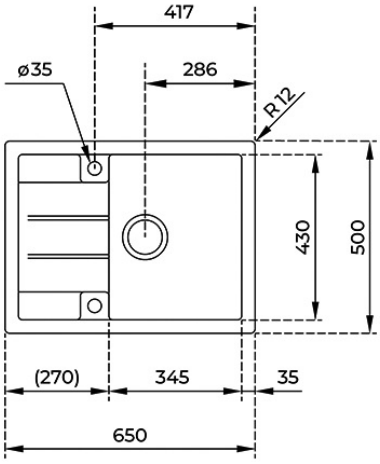

REFERENCE

REF: 40143505 EAN: 8421152132494

FEATURES

Tegranite+ sink
One bowl and one drainer
Inset installation
3½" automatic basket waste
200 mm deep bowl
45 cm base unit

DIMENSIONS

Product height (mm):
Product width (mm): 500
Product depth (mm): 200
Product length (mm): 650
Net weight (Kg): 11,77

COLOURS

40143505	Carbon
40143518	Topasbeige
40143518	White
40143518	Metallic grey
40143518	Metallic black