Duetta 2B
Inset stainless steel sink with two bowls

REFERENCE

REF: 10109025 EAN: 8421152034255

FEATURES

Sphera Series
Stainless steel sink
Two bowls
Inset installation
3½" manual basket waste
150 mm deep bowls
90 cm base unit

Lifetime warranty

Antibacterial

DIMENSIONS

Product height (mm):
Product width (mm): 482
Product depth (mm): 150
Product length (mm): 915
Net weight (Kg): 4,2

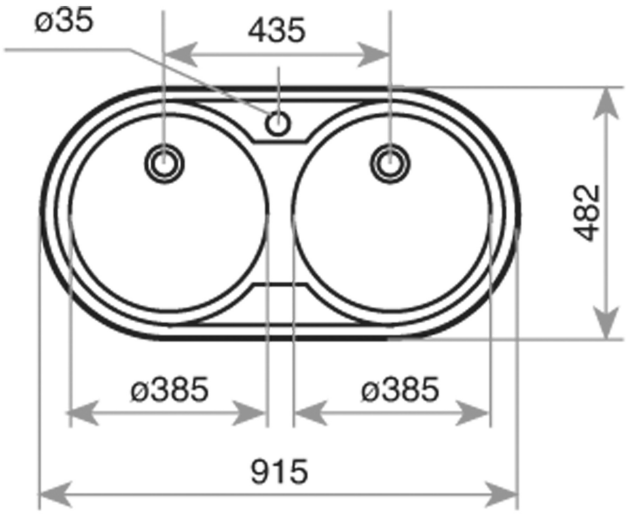

COLOURS

10109025 Stainless steel