TU 34.18 L
Undermount stainless steel sink

Lifetime warranty

Antibacterial

REFERENCE

REF: 10125044 EAN: 8421152032299

FEATURES

Space Series
Stainless steel sink
Two bowls
Undermount installation
3½" manual basket waste without overflow
250 and 200 mm deep bowls
90 cm base unit

DIMENSIONS

Product height (mm):
Product width (mm): 470
Product depth (mm): 250
Product length (mm): 879
Net weight (Kg): 6,1

COLOURS

10125044 Stainless steel
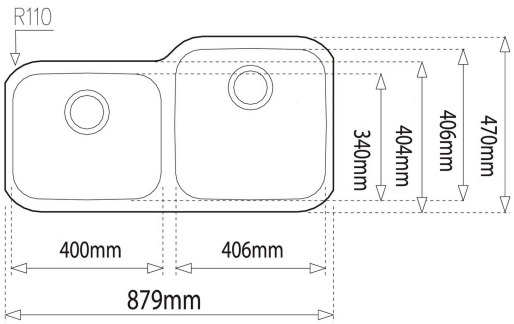
10125041 Stainless steel