FlexLinea RS15 71.40
3-in-1 Installation stainless steel sink with one bowl

REFERENCE

REF: 115000011 EAN: 8434778004373

FEATURES

FlexLinea Series
Stainless steel sink
One bowl
3-in-1 installation possibilities: undermount, top or flush
Easy clean radius R15 corners
3½" SQ manual basket waste with siphon
Decorative SQ cover
SilentSmart, 50% less noise
200 mm deep bowl
80 cm base unit

200mm depth

Antibacterial

Lifetime warranty + SilentSmart

R15, easy to clean

DIMENSIONS

Product height (mm):
Product width (mm): 440
Product depth (mm): 200
Product length (mm): 750
Net weight (Kg): 5,26

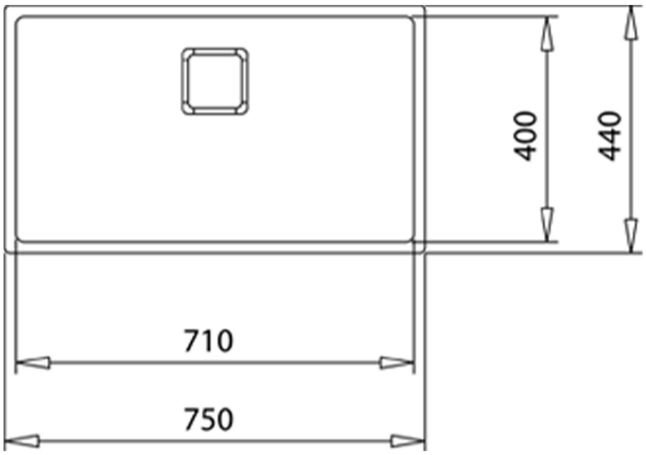

COLOURS

115000011 Stainless steel

115000054 Stainless steel