**Comfor 60 B-TQ 1½B 1D**
Inset Tegranite sink with one bowl, one auxiliary bowl and one drainer

Colour Intensity | Easy Clean | Food safe | High resistance

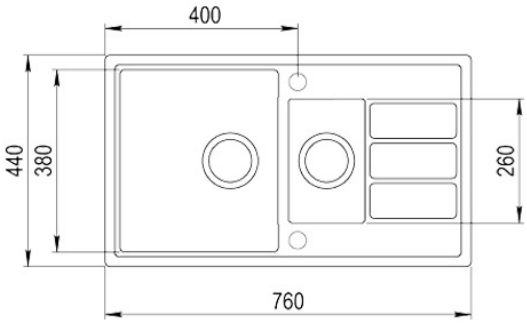


## REFERENCE

REF: 115380000 EAN: 8434778002379

## FEATURES

Tequartz sink
One bowl, one auxiliary bowl and one drainer
Excellent UV resistance against decoloring
Bacteria-free surface very easy to clean
Inset installation
Reversible drainer
3½" automatic basket waste with overflow and siphon
170 and 95 mm deep bowls
60 cm base unit

## DIMENSIONS

**Product height (mm):** 200
**Product width (mm):** 440
**Product depth (mm):** 170
**Product length (mm):** 760
**Net weight (Kg):** 13,43

## COLOURS