Stone 90 B-TG 2B

Inset Tegranite sink with two bowls



200mm depth | Colour Intensity | Easy Clean | Food safe | High resistance

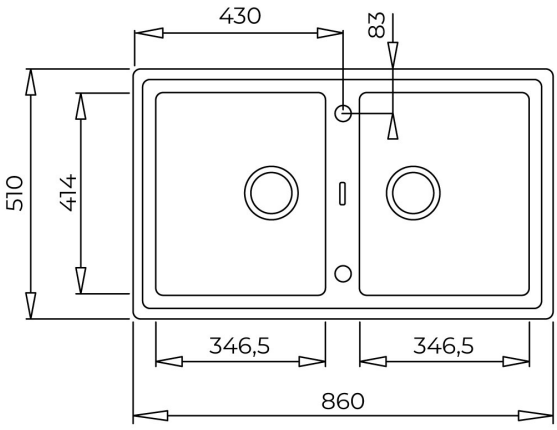

REFERENCE

REF: 115260009 **EAN:** 8434778005240

FEATURES

Stone Series
Tegranite+ sink
Two bowls
High resistance surface to impacts, thermal shocks and high temperatures
Excellent UV resistance against decoloring
Bacteria-free surface very easy to clean
Inset installation
80% quartz and resins
3½" automatic basket waste with siphon
200 mm deep bowls
90 cm base unit

DIMENSIONS

Product height (mm):
Product width (mm): 510
Product depth (mm): 200
Product length (mm): 860
Net weight (Kg): 15,5

COLOURS

	115260009	Sandbeige
	115260010	Metallic black
	115260012	White
	115260007	Metallic grey
	115260008	Carbon
	115260011	Topasbeige
	115260013	Dark grey