ForSquare 34.40 TG
Inset Tegranite sink with one bowl

200mm depth | Colour Intensity | Easy Clean | Food safe | High resistance

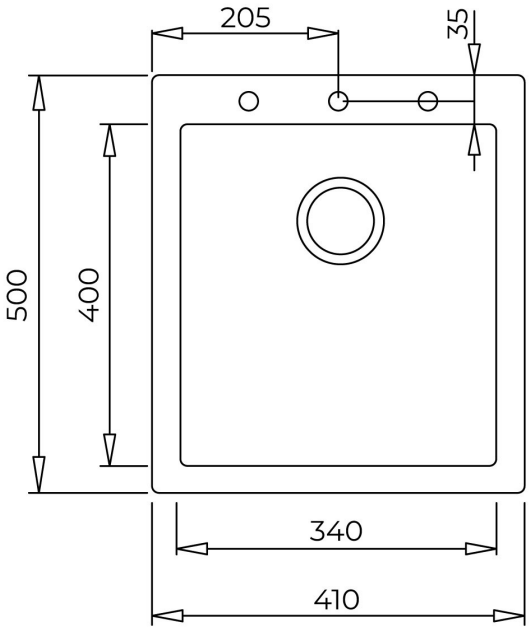

REFERENCE

REF: 115230011 EAN: 8434778007145

FEATURES

ForSquare Series
Tegranite+ sink
1 bowl
High resistance surface to impacts, thermal shocks and high temperatures
Excellent UV resistance against decoloring
Bacteria-free surface very easy to clean
Inset installation
80% quartz and resins
3½" automatic basket waste with siphon
200 mm deep bowl
45 cm base unit

DIMENSIONS

Product height (mm):
Product width (mm): 500
Product depth (mm): 200
Product length (mm): 410
Net weight (Kg): 6,7

COLOURS

115230011	Stone grey
115230010	Artic white
115230010	Bright cream
115230010	Avena beige
115230010	Black