Square 40.40 TG
Undermount Tegranite sink with one bowl

200mm depth | Colour Intensity | Easy Clean | Food safe | High resistance

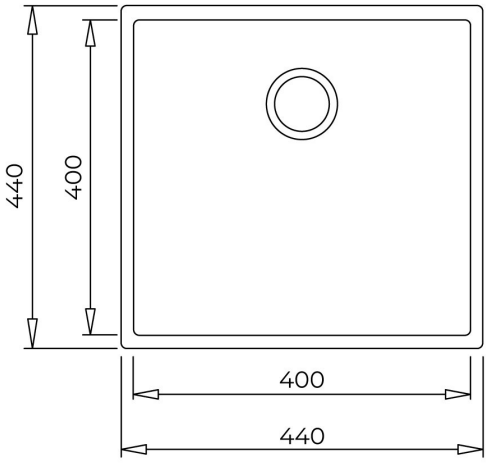

REFERENCE

REF: 115230028 EAN: 8434778007459

FEATURES

Square Series
Tegranite+ sink
1 bowl
High resistance surface to impacts, thermal shocks and high temperatures
Excellent UV resistance against decoloring
Bacteria-free surface very easy to clean
Undermount installation
80% quartz and resins
3½" manual basket waste with siphon
200 mm deep bowl
50 cm base unit

DIMENSIONS

Product height (mm):
Product width (mm): 440
Product depth (mm): 200
Product length (mm): 440
Net weight (Kg): 5,4

COLOURS

115230028	Bright cream
115230025	Avena beige
115230025	Stone grey
115230025	Artic white
115230025	Black