840.483 (33.19) 2B 7
Topmount stainless steel sink with two bowls

Lifetime warranty

Antibacterial

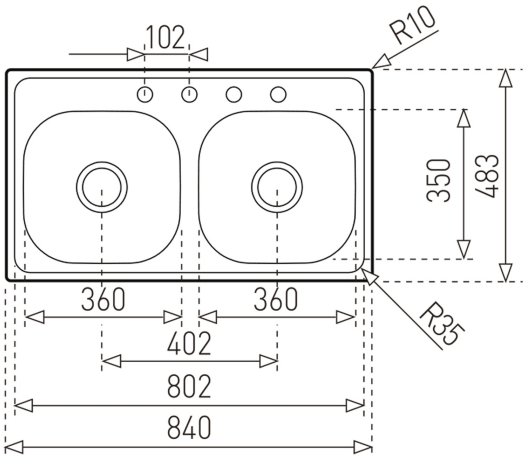

REFERENCE

REF: 40136632 EAN: 8421152104149

FEATURES

Diverse Series
Stainless steel sink
Two bowls
Inset installation
3½" manual waste without overflow
178 mm deep bowls
80 cm base unit

DIMENSIONS

Product height (mm):
Product width (mm): 483
Product depth (mm): 178
Product length (mm): 840
Net weight (Kg):

COLOURS

40136632 Stainless steel

40136633 Stainless steel